Magnaloy Products Catalog

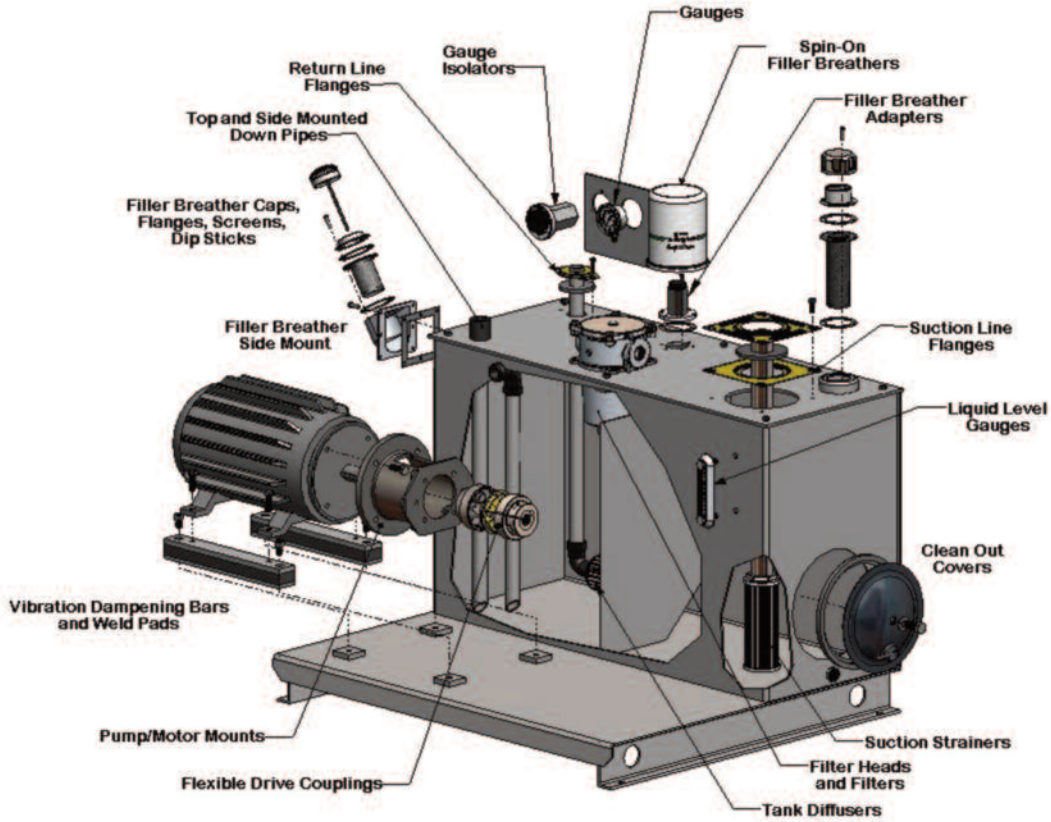

QUICK INDEX:

Full Product Index i

Flexible Drive Couplings 1
- Premium Line
- PM 90 Coupling

Pump/Motor Mounts 2
- General Information
- Horizontal Mounts
- Vertical Mounts
- Engine Mounts
- Welded Steel Mounts

Bar Manifolds 3
- General Information
- In-Line Bar Manifolds
- IntegratedCircuit Manifolds
- Subplates
- Cover Plates
- Valve Adaptors
- Manifold Accessories
- Header Bar Manifolds
- Junction Bar Manifolds

Reservoirs 4
- General Information
- Reservoirs
- End Covers

Accessories 5
- Filler Breathers
- Reservoir Flanges
- Channel Mounted Cushion Clamps
- Modular Cushion Clamps
- Suction Strainers
- Tank Diffusers
- Spin-On Filers
- Tank Top Filers
- Pressure Gauges
- Liquid Level Gauges
- SAE Couplings
- Motor Dampening Bars
- Motor Base Plates
- Gauge Isolators
- Pressure Switch
- Modular O'Ring Kit

Rod Alignment Couplers 6
- M Series
- R Series

Reference Section R

magnaloy coupling company *501 Commerce Drive Alpena, MI 49707* *989 356-2186*

A Division of Douville Johnston Corporation *Fax: 989 354-4190* *http://www.magnaloy.com*

C

Product Index

Product — **Page Number**

Flexible Drive Couplings

Premium Flexible Drive Couplings . . . 2
PM90 Flexible Drive Coupling . . . 13

Pump/Motor Mounts

General Information . . . 17
Horizontal Pump/Motor Mounts . . . 18
Vertical Pump/Motor Mounts . . . 21
Pump/Engine Mounts . . . 24
Horizontal Welded Steel Pump/Motor Mounts . . . 27
Vertical Welded Steel Pump/Motor Mounts . . . 29
Welded Steel Pump/Engine Mounts . . . 31
Pump/Motor Mount Dampening Ring . . . 33

Hydraulic Bar Manifolds

General Information . . . 36
In-line Bar Manifolds . . . 37
Integrated Circuit Manifolds . . . 62
Subplates . . . 66
Cover Plates . . . 75
Valve Adaptors . . . 82
Manifold Accessories . . . 87
- Orifice Plate . . . 90
- Tapping Plate . . . 92

Header Bar Manifolds . . . 96
Junction Bar Manifolds . . . 102

Reservoirs

General Information . . . 106
Vertical Reservoirs . . . 107
JIC Reservoirs . . . 113
L Shaped Reservoirs . . . 114
Horizontal Reservoirs . . . 118
Drip Pans . . . 120
Stacking Modules . . . 121
End Covers . . . 122

Reservoir Accessories

Filler Breathers . . . 125
Reservoir Flanges . . . 128
Channel Mounted Cushion Clamps . . . 131
Modular-Stackable Cushion Clamps . . . 135
Suction Strainers . . . 141
Tank Diffusers . . . 143
Spin-On Filters . . . 144
Tank Top Filters . . . 146
Pressure Gauges . . . 152
Liquid Level Gauges . . . 154
SAE Full and Half Couplings . . . 156
Motor Dampening Bars . . . 157
Motor Base Plates . . . 160
Gauge Isolators . . . 161
Pressure Switches . . . 162
Modular O-Ring Kit . . . 163

Cylinder Rod End Alignment Couplers

M-Series Rod End Coupler . . . 165
R-Series Rod End Coupler . . . 167

REFERENCE MATERIAL INDEX . . . 169

magnaloy coupling company *501 Commerce Drive Alpena, MI 49707* ***989 356-2186***
A Division of Douville Johnston Corporation *Fax: 989 354-4190* *http://www.magnaloy.com*

SECTION 1

MAGNALOY FLEXIBLE DRIVE COUPLINGS

NOTE: *Due to Magnaloy's policy of continuous improvement, specificaitons are subject to change without notice. Check with the factory or our Web Site at www.magnaloy.com for the latest information.*

Magnaloy Coupling Design Features

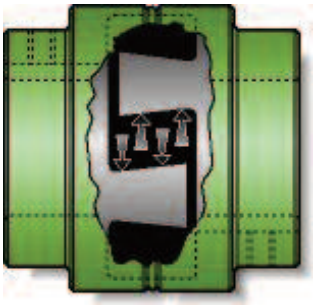

Load-Lock Design... is simple and effective. The drive lug configuration is tapered from top to base, as are the mating lugs of the opposing coupling hub. Under load, the insert conforms to the tapers, inter-locking the two hubs. This load-lock design protects bearings and equipment by eliminating end thrust in both directions.... and it requires only one set-screw in each hub.

1

Radial Lug Design... is logical and efficient. The most common failure of an elastomeric insert type drive coupling is hysteresis failure of the elastomeric element - breakdown of the elastomer due to cyclical overworking and the associated heat generation. Magnaloy Coupling's drive lugs are in a true radial orientation. Applied forces are evenly distributed in the compressive direction only, eliminating the heat generating radial component. True compressive loading reduces internal heat generation and improves elastomer life.

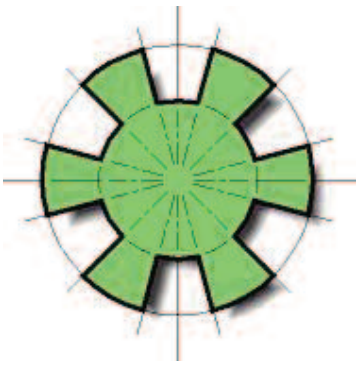

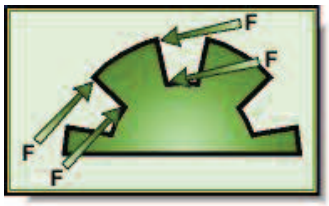

Magnaloy Coupling Design...

Under loaded conditions, the resultant forces applied on the element segments are evenly distributed in the compressive direction only. This results in no radial forces to multiply the internal heat generation.

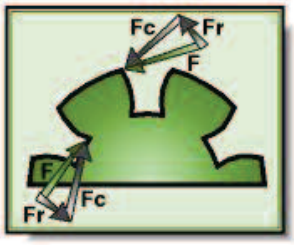

Conventional Design A...

Under loaded conditions this jaw design results in the applied forces exerting components in the compressive and radial directions. These forces change direction and magnitude along the jaw arc which greatly increase the internal movement of the element which causes heat generation.

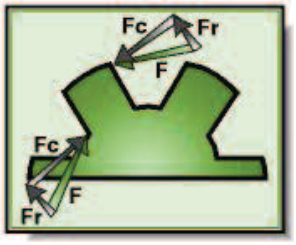

Conventional Design B...

This more conventional straight sided jaw design also exerts component forces in the compressive and radial directions when under load. The radial component is outward (acting to extrude the element) and changes in magnitude only, as does the compressive component, along the jaw surface. The component forces resulting from this design also causes increased internal movement in the element.

A note about Set-Screws ...

The Premium Line of Magnaloy Couplings comes standard with a single set-screw over the keyway. Optional **Double Set-Screws** are available at either 45° or 90° to the keyway. Double set-screws help improve shaft gripping forces by increasing the hoop-stresses generated from tightening a single set-screw. Double set-screws at 45° will produce greater forces than double set-screws at 90°. Either are available upon request by specifying '**DSS45**' or '**DSS90**' following the hub part number. M30011210DSS45

Magnaloy's Clamp feature is also availble with bored and keyed hubs, specify '**C**' following the hub part number. M30011210C

magnaloy coupling company *501 Commerce Drive Alpena, MI 49707* ***989 356-2186***
A Division of Douville Johnston Corporation *Fax: 989 354-4190* *http://www.magnaloy.com*

Magnaloy is the original lightweight, heavy-duty flexible drive coupling. Light weight magnesium construction makes Magnaloy couplings 76% lighter than cast iron and 36% lighter than aluminum units... and they're stronger than either!

The benefits are many... Reduced loads on bearings, shafts and pumps, for longer component life. Easier handling and installation. Rust proof and corrosion resistant.

Magnaloy's close machining tolerances (TIR of .002") assures vibration-free operation and easy, accurate alignment without need for special tools. Solid magnesium alloy permanent mold castings are heat treated and offer the highest strength-to-weight ratio available.

Coupling Performance Specifications

Coupling Model	Maximum Bore	Wr^2 lb-ft^2	Insert Number	Rated Torque lb-in	Torsional Rigidity lb-in/Deg	Horse Power Rating @ 100 rpm	1200 rpm	1800 rpm
100	1 1/8	0.0046	170N	340.7	42	0.55	6.5	9.8
			170U	511.0	53	0.82	9.8	14.7
			170H	1,022.1	182	1.65	19.8	29.7
200	1 3/8	0.0068	270N	398.3	55	0.64	7.6	11.5
			270U	597.4	68	0.96	11.5	17.2
			270H	1,194.9	234	1.92	23.0	34.5
300	1 5/8	0.022	370N	701.4	81	1.12	13.5	20.2
			370U	1,052.1	148	1.68	20.2	30.3
			370H	2,104.2	336	3.36	40.4	60.6
400	1 7/8	0.031	470N	1,056.3	138	1.69	20.3	30.4
			470U	1,584.5	310	2.50	30.4	45.6
			470H	3,168.9	488	5.10	60.8	91.3
500	2 3/8	0.071	570N	2,194.8	314	3.50	42.1	63.2
			570U	3,292.2	695	5.30	63.2	94.8
			570H	6,584.4	1,571	10.50	146.4	189.6
600	2 5/8	0.16	670N	4,946.7	676	7.90	94.9	142.5
			670U	7,420.1	1,510	11.90	142.5	213.7
			670H	14,840.1	2,960	23.70	284.9	427.4
700	2 7/8	0.34	770N	11,639.8	1,805	18.60	223.5	335.2
			770U	17,459.7	2,104	27.90	335.2	502.8
			770H	29,099.5	5,960	46.50	558.8	838.0
800	3 7/8	0.95	870N	21,889.4	3,680	35.00	420.3	630.4
			870U	32,834.1	-	52.50	630.4	945.6
			870H	47,062.2	11,950	75.20	903.0	1,354.5
900	4 3/4	4.20	970N	47,842.3	8,428	76.50	918.6	1,377.9
			970U	71,763.5	-	114.80	1,377.9	2,066.8

Magnaloy Coupling Dimensional Specifications

Models 100, 200, 300, 400

	100	200	300	400
A	2.54	3.10	3.58	4.24
B	2.600	2.900	3.450	3.980
C	2.00	2.25	2.90	3.05
D	0.56	0.68	0.78	1.00
E	0.68	0.84	0.96	1.06
F	0.42	0.42	0.44	0.54
G	0.31	0.43	0.56	0.73
W	1/16	1/16	1/16	1/16
X	0.90	0.90	0.98	1.20
T	1/4-20	5/16-18	5/16-18	3/8-16

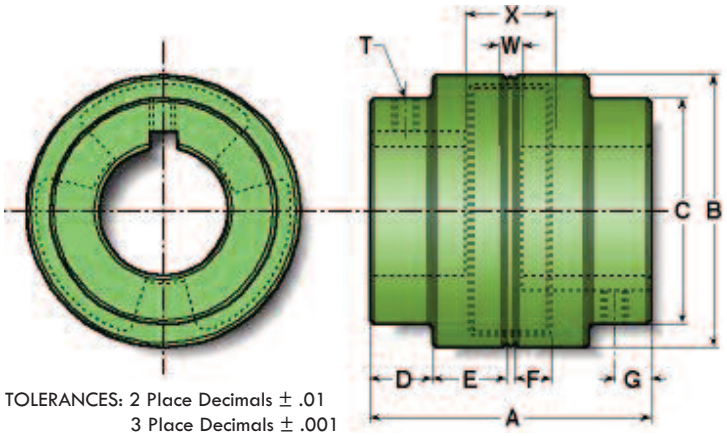

TOLERANCES: 2 Place Decimals ± .01
3 Place Decimals ± .001

Model 500

	500
A	4.67
B	4.800
C	4.00
D	1.04
E	1.23
F	.064
G	.070
W	1/16
X	1.41
T	3/8-16

X*: Maximum Space between shaft ends to allow full shaft engagement in Hub Bore.

W*: Minimum Space between shaft ends.

* Given for reference only.

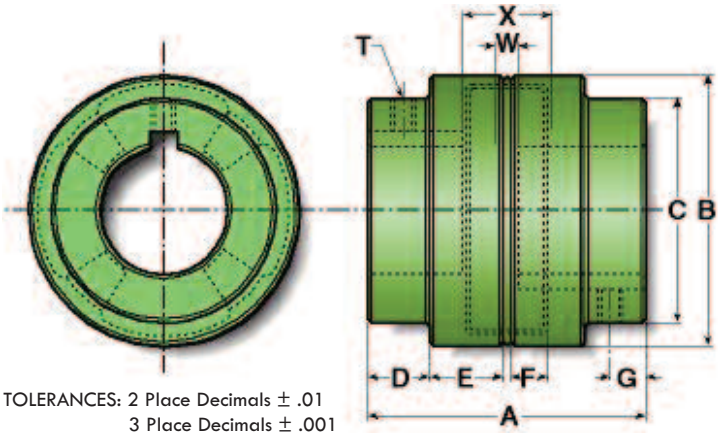

TOLERANCES: 2 Place Decimals ± .01
3 Place Decimals ± .001

Models 600, 600, 800, 900

	600	700	800	900
A	5.98	6.99	7.99	10.15
B	5.975	6.900	8.600	11.400
C	4.50	5.19	7.00	8.30
D	1.60	2.08	2.25	2.75
E	1.33	1.32	1.62	2.20
F	0.62	0.89	1.00	1.32
G	1.13	1.13	1.58	1.88
W	1/16	1/16	1/16	1/16
X	1.36	1.97	2.25	2.89
T	3/8-16	1/2-13	1/2-13	3/4-10

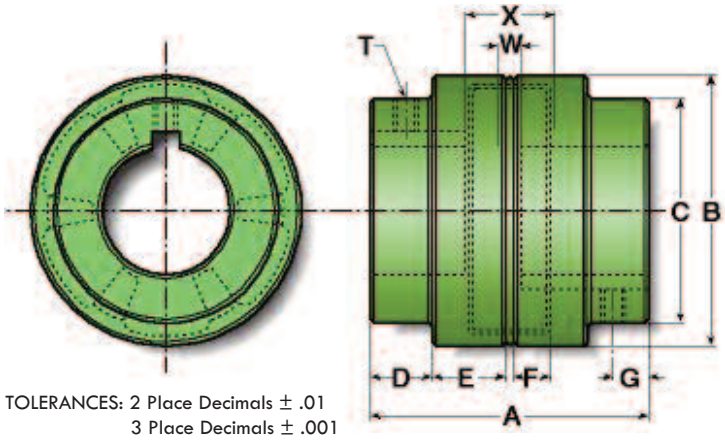

TOLERANCES: 2 Place Decimals ± .01
3 Place Decimals ± .001

magnaloy coupling company *501 Commerce Drive Alpena, MI 49707* ***989 356-2186***
A Division of Douville Johnston Corporation *Fax: 989 354-4190* *http://www.magnaloy.com*

Standard Bore and Keyway Combinations

Magnaloy "Standard" Bore Key Combinations														
Model Code	Bore/Key Code	Model Bore		Model Key	100	200	300	400	500	600	700	800	900
M _ _ _	01203	3/8	x	3/32	*	*							
M _ _ _	01403	7/16	x	3/32	*	*							
M _ _ _	01404	7/16	x	1/8	*	*							
M _ _ _	01604	1/2	x	1/8	*	*	*						
M _ _ _	01804	9/16	x	1/8	*	*	*						
M _ _ _	02005	5/8	x	5/32	*	*	*						
M _ _ _	02006	5/8	x	3/16	*	*	*	*					
M _ _ _	02206	11/16	x	3/16	*	*	*	*					
M _ _ _	02404	3/4	x	1/8	*	*	*						
M _ _ _	02406	3/4	x	3/16	*	*	*	*	*	*			
M _ _ _	02806	7/8	x	3/16	*	*	*	*	*	*			
M _ _ _	02808	7/8	x	1/4	*	*	*	*	*	*			
M _ _ _	03008	15/16	x	1/4	*	*	*						
M _ _ _	10006	1	x	3/16	*	*	*	*	*	*			
M _ _ _	10008	1	x	1/4	*	*	*	*	*	*			
M _ _ _	10408	1 1/8	x	1/4	*	*	*	*	*	*			
M _ _ _	10608	1 3/16	x	1/4			*		*				
M _ _ _	10808	1 1/4	x	1/4		*	*	*	*	*			
M _ _ _	10810	1 1/4	x	5/16		*	*	*	*	*	*	*	
M _ _ _	11210	1 3/8	x	5/16		*	*	*	*	*	*	*	
M _ _ _	11212	1 3/8	x	3/8			*						
M _ _ _	11412	1 7/16	x	3/8			*	*	*				
M _ _ _	11610	1 1/2	x	5/16				*	*	*			
M _ _ _	11612	1 1/2	x	3/8			*	*	*	*	*	*	
M _ _ _	12012	1 5/8	x	3/8			*	*	*	*	*	*	
M _ _ _	12412	1 3/4	x	3/8				*	*	*	*	*	

Magnaloy "Standard" Bore Key Combinations														
Model Code	Bore/Key Code	Model Bore		Model Key	100	200	300	400	500	600	700	800	900
M _ _ _	12414	1 3/4	x	7/16				*	*	*	*	*	
M _ _ _	12816	1 7/8	x	1/2				*	*	*	*	*	*
M _ _ _	13016	15/16	x	1/2					*	*			
M _ _ _	20016	2	x	1/2					*	*	*	*	*
M _ _ _	20416	2 1/8	x	1/2					*	*	*	*	*
M _ _ _	20816	2 1/4	x	1/2					*	*	*	*	*
M _ _ _	21220	2 3/8	x	5/8					*	*	*	*	*
M _ _ _	21620	2 1/2	x	5/8						*	*	*	*
M _ _ _	22020	2 5/8	x	5/8						*	*	*	*
M _ _ _	22420	2 3/4	x	5/8							*	*	*
M _ _ _	22824	2 7/8	x	3/4							*	*	*
M _ _ _	30024	3	x	3/4								*	*
M _ _ _	30824	3 1/4	x	3/4								*	*
M _ _ _	31228	3 3/8	x	7/8								*	*
M _ _ _	31628	3 1/2	x	7/8								*	*
M _ _ _	32028	3 5/8	x	7/8								*	*
M _ _ _	32428	3 3/4	x	7/8								*	*
M _ _ _	32832	3 7/8	x	1								*	*
M _ _ _	40032	4	x	1									*
M _ _ _	40432	4 1/8	x	1									*
M _ _ _	40832	4 1/4	x	1									*
M _ _ _	41232	4 3/8	x	1									*
M _ _ _	41632	4 1/2	x	1									*
M _ _ _	41640	4 1/2	x	1 1/4									*
M _ _ _	42040	4 5/8	x	1 1/4									*
M _ _ _	42440	4 3/4	x	1 1/4									*

Shaded Area: AGMA semi-standard bore key combinations.

Part Number Usage: Magnaloy Coupling Hub part numbers may be specified using the following format: Start with letter "M" designating Magnaloy, followed by 3 digit Model Code (100, 200, etc.), then the specific 5 digit Bore/Key Code.

Example: Model 500 Hub with a 1 /38 bore and 5/16 keyway would be specified as: M50011210 - No bore hubs are designated as "R" code, ie. M500R.

Bore Tolerances

Over	Include	Tolerance
--	1	+.0008/+.0003
1	2	+.0013/+.0005
2	3	+.0018/+.0008
3	4	+.0020/+.0010
4	5	+.0023/+.0010

Additional Coupling Specifications

Model Number	100	200	300	400	500	600	700	800	900
Maximum Bore	1 1/8	1 3/8	1 5/8	1 7/8	2 3/8	2 5/8	2 7/8	3 7/8	4 3/4
Complete Coupling Approx. Weight (Solid Hub)	3/4	1	2	3	4	7	12	18	38
Number of Drive Lugs	3	3	3	3	4	6	6	6	6
Hub Movement for Insert Removal	.74	.74	.75	.98	1.12	1.02	1.50	1.63	2.27
Basic Insert Number	170	270	370	470	570	670	770	870	970

Magnaloy Couplings are available with a variety of special features which include splined bores. The "Splined Coupling Specifications" chart on page 6 shows several "In-house" splines available for quick delivery. Many additional splined bores are available by contacting the factory, including straight sided "PTO" type splines and metric splines.

The Clamp-Type Coupling utilized the basic Magnaloy coupling with the addition of the clamp feature. Developed to compensate for variations in spline formation methods and tolerances. Assures centering of the coupling and positive retention on the shaft. The clamp feature is suggested for all splined couplings, but is also available in smooth bored and keyed models.

Magnaloy's Steel Bushed Splined Bore* Coupling combines all the design and lightweight features of the Magnaloy Coupling with the added spline tooth strength and wear resistance of steel. Under normal conditions the standard "Splined Bore" coupling will perform satisfactorily and the addition of the "Clamp Feature" compensates for various fit conditions. When heavy cyclic loads, reverse loading and high torque loads exist in combination with fit variations, spline tooth failures and fretting can be corrected by utilizing Magnaloy's steel bushed coupling. Of course, to achieve optimum benefits, Magnaloy's clamp feature is recommended - assuring accurate centering and positive retention of the coupling on the shaft.

** Although the steel bushing feature was designed primarily for spline bores, it is also available in smooth bored and keyed sizes.*

magnaloy coupling company *501 Commerce Drive Alpena, MI 49707* ***989 356-2186***
A Division of Douville Johnston Corporation *Fax: 989 354-4190* *http://www.magnaloy.com*

Spline Coupling Specifications

Spline Size			Pressure Angle (Degrees)	SAE Designation	Major Diameter (Inches)	Std Coupling Available Model Sizes	Steel Bushed Coupling	
Number of Teeth	Pitch Ratio	Spline Code					Bushing Diameter	Available Model Sizes
9	16/32	0916	30^0	A	0.625	100 - 900	1.250	200 - 600
13	8/16	1308	30^0	D, E	1.750	400 - 900	2.625	600 - 900
13	16/32	1316	30^0	B	0.875	100 - 900	1.500	300 - 800
14	12/24	1412	30^0	C	1.250	200 - 900	2.250	500 - 900
15	8/16	1508	30^0	F	2.000	500 - 900	3.500	800 - 900
15	16/32	1516	30^0	BB	1.000	100 - 900	1.750	400 - 800
17	12/24	1712	30^0	CC	1.500	300 - 900	2.250	500 - 900
21	16/32	2116	30^0		1.375	300 - 900	2.250	500 - 900
23	16/32	2316	30^0		1.500	300 - 900	2.250[1]	500 - 900
27	16/32	2716	30^0		1.750	400 - 900	2.625[2]	600 - 900
40	16/32	4016	30^0		2.562	600 - 900	3.875	800 - 900

Note: 1 - With Model 600 - 900, Bushing O.D. is 2.625.
2 - With Model 700 & 800, Bushing O.D. is 2.875.
Spline Type Identifier Code: A = Spline, B = Steel Bushing
Clamp Type Code: C = Clamp Type.

Part Number Usage: Magnaloy Splined Coupling part numbers may be specified using the following format: Start with letter "M" designating Magnaloy, follow with 3 digit Model Code (100, 200, etc.), next use a single letter Spline Type Identifier Code ("A" for regular spline or "B" for steel bushing), then the specific 4 digit Spline Code. If a clamp type coupling is desired, use the letter code "C" after the Spline Code.

Examples: Model 300 hub with 13 tooth 16/32 splined bore: M300A1316. Same item with steel bushing: M300B1316. Same item with steel bushing and clamp: M300B1316C.

Clamp Type Coupling Specifications

Coupling Model	Bolt Location		U	
	Z	Y	Bolt Size	Torque Spec.
100	0.31	0.68	1/4 - 20	130-140 in lbs
200	0.43	0.75	1/4 - 20	130-140 in lbs
300	0.47	0.95	5/16 - 18	210-220 in lbs
400	0.69	0106	5/16 - 18	210-220 in lbs
500	0.72	1.25	3/8 - 16	300-310 in lbs
600	1.13	1.50	7/16 - 14	35-36 ft lbs
700	1.13	1.75	7/16 - 14	35-36 ft lbs
800	1.30	2.56	1/2 - 13	49-50 ft lbs
900*	0.75 & 2.19	3.00	3/4 - 10	100-110 ft lbs

** Model 900 utilizes two bolt clamp design.*

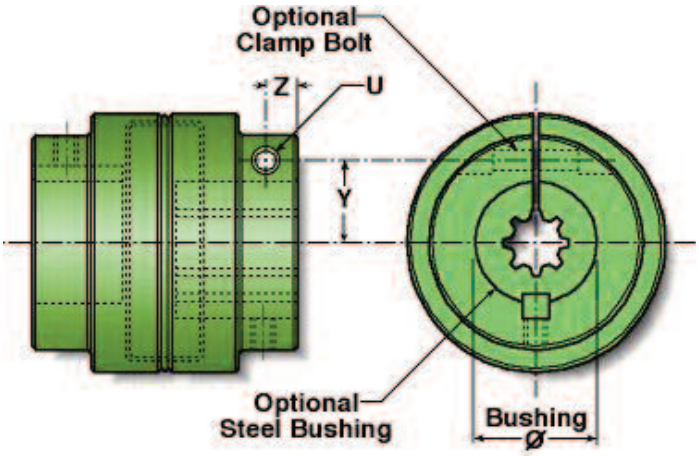

magnaloy coupling company *501 Commerce Drive Alpena, MI 49707* ***989 356-2186***
A Division of Douville Johnston Corporation *Fax: 989 354-4190* *http://www.magnaloy.com*

Magnaloy Coupling's full range of flexible inserts permit custom design performance for a wide range of applications. All insert materials offer complete electrical insulation, as Magnaloy's design eliminates all metal-to-metal contact.

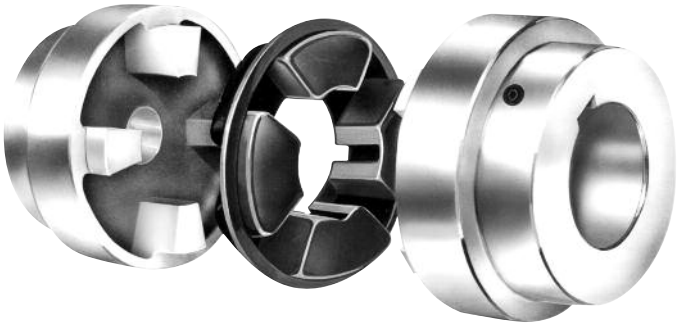

Part Number Usage: Magnaloy Coupling Insert part numbers may be specified using the following format: Start with the letter "M" for Magnaloy, followed by the 3 digit Basic Insert Number Code (170, 270, etc.), then the specific single letter Insert Material Code. If an optional durometer is being specified, after the Material Code supply the durometer number divided by 10.

Examples: Urethane insert for Model 300: M370U. 80 Durometer Neoprene for Model 200: M270N8.

Neoprene (Code N) - Black material - Standard material with Magnaloy Coupling. Good general purpose material offering good resiliency and load capabilities. Temp range -30°F to +250°F (-34°C to -121°C). Optional 80A durometer (painted Gold) and 90A durometer (painted Silver) are available for slight increased load capability and less resiliency.

Nitrile (Buna N)(Code B) - Painted Blue. Excellent material with petroleum products. Excellent compression set and abrasion resistance characteristics. Temp range -60°F to +250°F (-51°C to +121°C).

Urethane (Code U) - Yellow material. Excellent mechanical and physical properties. Offers good medium duty durability and resiliency. Urethane tends to soften at higher temperatures and humid conditions. Temp range -30°F to +150°F (-34°C to +66°C).

Viton (Fluorocarbon)(Code V) - Red material. Excellent fluid compatibility and high temperature characteristics. Good compression set and resiliency. Temp range -20°F to +350°F (-29°C to +177°C).

Hytrel (Code H) - Blue material. Superior physical and mechanical properties and excellent fluid compatibility and high temperature characteristics. Hardness (50D) approaches that of plastic and offers little resiliency. Excellent performance under heavy duty conditions. Temp range -65°F to +300°F (-54°C to +149°C).

Other materials are available for special applications. Consult factory for recommendations and availability.

magnaloy coupling company *501 Commerce Drive Alpena, MI 49707* ***989 356-2186***
A Division of Douville Johnston Corporation *Fax: 989 354-4190* *http://www.magnaloy.com*

Service Factors - Load Characteristics

	Type of Prime Mover			
Load Classification	Standard Motor or Turbine	High Torque Motor	I.C. Engine 6 or more cyl.	I.C. Engine less than 6 cyl.
Uniform (U)	1.0	1.5	1.5	2.0*
Moderate (M)	1.5	2.0	2.0	2.5*
Heavy (H)	2.0*	2.5*	2.5*	3.0*

Uniform Load: Steady loading, non-reversing, torque does not exceed rating.
Moderate Load: Uneven loading with moderate shock, frequent starts, infrequent reversals, peak torque may exceed average rating of prime mover by up to 125%.
Heavy Load: Uneven loading with heavy shock, frequent reversals, peak torque may exceed average rating of prime mover by up to 150%.
*** *Recommend use of Hytrel Insert.***

Drive Unit		Load Sym.
Agitators		U
Blowers		U
Compressors	- Centrifugal	U
	- Rotary	M
	- Reciprocating	H*
Conveyors -		U
	- Reciprocating	M
	- Screw	M
	- Shaker	H
Cranes & Hoists		M
Crushers		H*
Elevators		M
	- Freight & Pass.	H*
Fans	- Centrifugal	U
	- Propeller	M
	- Cooling Tower	H
Generators		U
	- Welding	H
Mills		H*
Machine Tools		M
Mixers		M
Paper Mill Machinery		M
Pumps	- Centrifugal	U
	- Rotary	M
	- Reciprocating	H*
	- On Injection Molding Equip.	H*
Screens	- Air & Water Washing	U
	- Freight & Pass.	H
Stokers		U
Textile Machinery		M
Woodworking Machinery		M
Winches		H*

Note: *Above service factors are intended for use as a general guide only.*
**Recommend use of Steel Bushing and Clamp with Splined Bores.*

Selection Method

1. **Several specifics must be considered to make the best choice of couplings:**
   A. Type of prime mover and load characteristics (see table above)
   B. Shaft diameter and key size or spline configuration (No. of teeth, pitch ratio, pressure angle)
   C. Horsepower rating of loads to be transmitted.
   D. Maximum operating speed (rpm)
   E. Maximum operating misalignment
   F. Clearance limitations
2. **Calculate effective hp/100 rpm by use of table above and select the minimum size coupling recommended**
3. **VERIFY YOUR SELECTION:**
   A. Check for maximum bore size
   B. Check dimensions for adequate clearance
   C. Indicate any special insert specification and/or coupling coating for environmental protection, if required

Equation: Effective HP per 100 RPM = rated HP x Service Factor x 100 / RPM

Example: 150 HP, 4 cyl. Diesel Engine Driving Reciprocation Irrigation Pump operating at 3250 RPM
Service Factor - 3.0 (Hytrel Insert Recommended)
Eff. HP per 100 RPM = 150 HP x 3.0 x 100 / 3250 RPM = 13.85 HP/100 RPM. Model 600 rating with Hytrel Insert is 23.7 HP/100 RPM.

magnaloy coupling company *501 Commerce Drive Alpena, MI 49707* ***989 356-2186***
A Division of Douville Johnston Corporation *Fax: 989 354-4190* *http://www.magnaloy.com*

1

Shaft spacing should be within range given by dimensions 'W' and 'X' as shown in charts on page 4.

Position each hub on proper size shaft - Magnaloy couplings are bored to standard "push fit" tolerances, if a tight fit exists, check shaft for burrs.

Maximum benefits are obtained with hubs positioned to allow complete shaft engagement within bore. However, some equipment designs do not permit this condition - maximum shaft engagement should be utilized in any case.

Alignment - Place a straight edge (scale) at top and side of coupling. Use a .005 inch feeler gauge under scale for final inspection. This will indicate accurate parallel and angular alignment.

Magnaloy's precision machined outside surfaces permit this simple, but accurate alignment method.

Secure equipment mounts and recheck alignment for movement.

Install the insert in the coupling positioning hubs in contact with lip around outside of insert.

Before tightening set screws, run the coupling and check for separation of hubs or "creep". Recheck alignment and tighten set screws.

With the Steel Bushed/Clamp type couplings, to facilitate installation on the shaft, it may be necessary to slightly loosen the set-screw over the keystock. When securing the coupling on the shaft, first tighten the clamp bolt, then tighten the set-screw against the keystock.

magnaloy coupling company *501 Commerce Drive Alpena, MI 49707* ***989 356-2186***

A Division of Douville Johnston Corporation *Fax: 989 354-4190* *http://www.magnaloy.com*

Mis-Alignment Capabilities

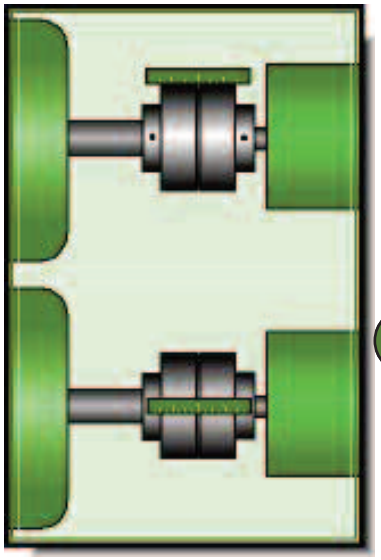

Magnaloy Couplings offer four-way flexibility (parallel, angular, axial and torsional) and require no lubrication. They are easily installed and properly aligned without use of special tools or equipment - a straight edge and hex wrench ar the only tools required. Magnaloy's insert reduces noise and vibration and permits needed flexibility for proper operation within alignment capabilities.

Recommended Torques for Fasteners

Model	Set Screw	Clamp Screw
100	60 - 70 in lbs	130 - 140 in lbs
200	130 - 140 in lbs	130 - 140 in lbs
300	130 - 140 in lbs	210 - 220 in lbs
400	190 - 200 in lbs	210 - 220 in lbs
500	190 - 200 in lbs	300 - 310 in lbs
600	190 - 200 in lbs	35 - 36 ft lbs
700	300 - 310 in lbs	35 - 36 ft lbs
800	300 - 310 in lbs	49 - 50 ft lbs
900	100 - 110 ft lbs	100 - 110 ft lbs

Intended as a general guide for fastener torques with Magnaloy Couplings.

Perfect alignment of equipment shafts, in most cases, is impractical to obtain or maintain, and misaligned equipment produces, excess stress on bearings and the coupling. Magnaloy's insert design will accept misalignment strain and, when excessive, will cause insert wear as a visual and audible indication of misalignment problems. However, Magnaloy's inserts are inexpensive and easily replaces; under normal conditions the insert seldom requires replacement.

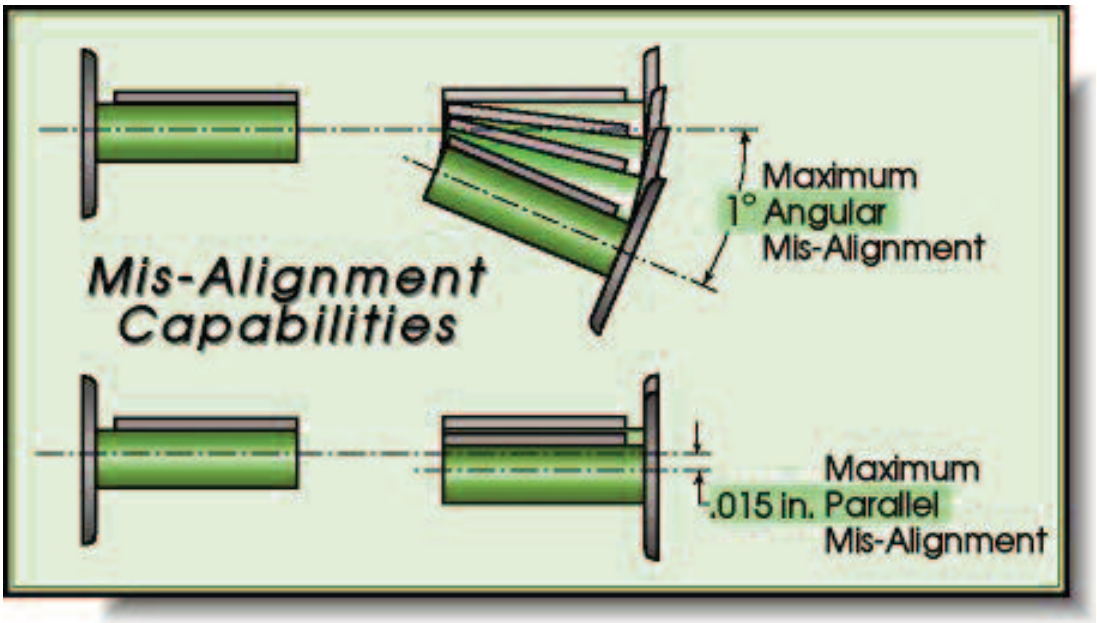

Keystock Interference with Drive Lug

Since the Magnaloy Coupling keyway, in a bored and keyed hub, is broached between the drive lugs, there is a potential for interference with the keystock of the drive hub and the drive lugs of the opposing hub. This interference will result when ALL the following conditions exist:

A) The shaft diameter is Greater than listed below
B) This shaft extends into the hub insert core area
C) The keystock on this shaft extends with the shaft into the insert core area

1 The interference condition can be corrected by shortening the keystock so it does not extend into the insert core area. The insert length should be limited to the length of the coupling hub bore.

Interference Potential exists when shaft diameters are greater than shown in this chart.

Model Size	Shaft Diameter	Key Size
100	7/8	1/4
200	1 3/16	1/4
300	1 5/16	5/16
400	1 1/2	3/8
500	1 15/16	1/2
600	2 1/2	5/8
700	2 3/4	5/8
800	3 1/2	7/8
900	4 1/2	1 1/4

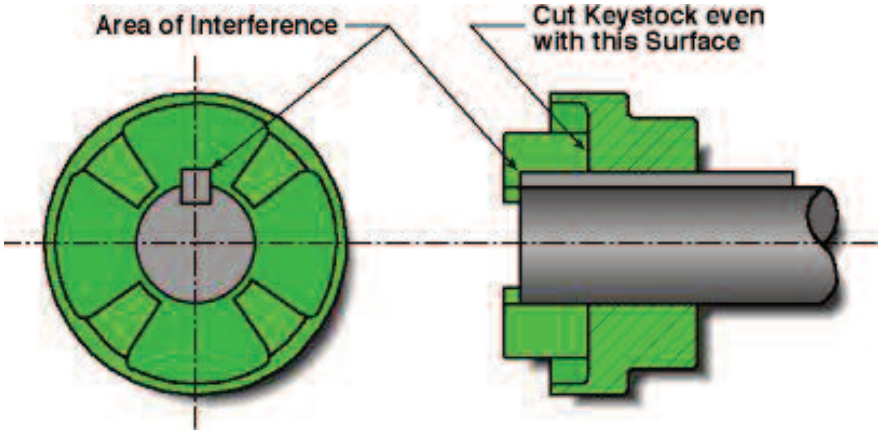

Failure to correct this condition will result in assembly difficulty and could cause damage to the drive or driven equipment. ***Check our web site at www.magnaloy.com for other bulletins.***

Notes

magnaloy coupling company 501 Commerce Drive Alpena, MI 49707 989 356-2186
A Division of Douville Johnston Corporation Fax: 989 354-4190 http://www.magnaloy.com

The Strong, High Quality, Low Cost Powdered Metal Coupling from Magnaloy

When your priorities for a coupling are economy and strength... specify the all-new Magnaloy Type PM90.
The PM90 is made from high-density powdered metal and is available in standard bores up to 1 1/8 inch maximum. Double set screws are standard in all bores 1/2 inch and over. The set screws are placed over the keyway and at a 45^0 angle to the keyway to allow greater hoop-stress generation and maximum shaft gripping. The increased drive lug surface area on the PM90 provides low unit loads on the insert drive segments while insuring more rapid heat dissipation. Magnaloy's exclusive insert design allows easy installation and replacement without hub removal. The drive lug design provides even compressive loading with no radial loading of insert drive elements.

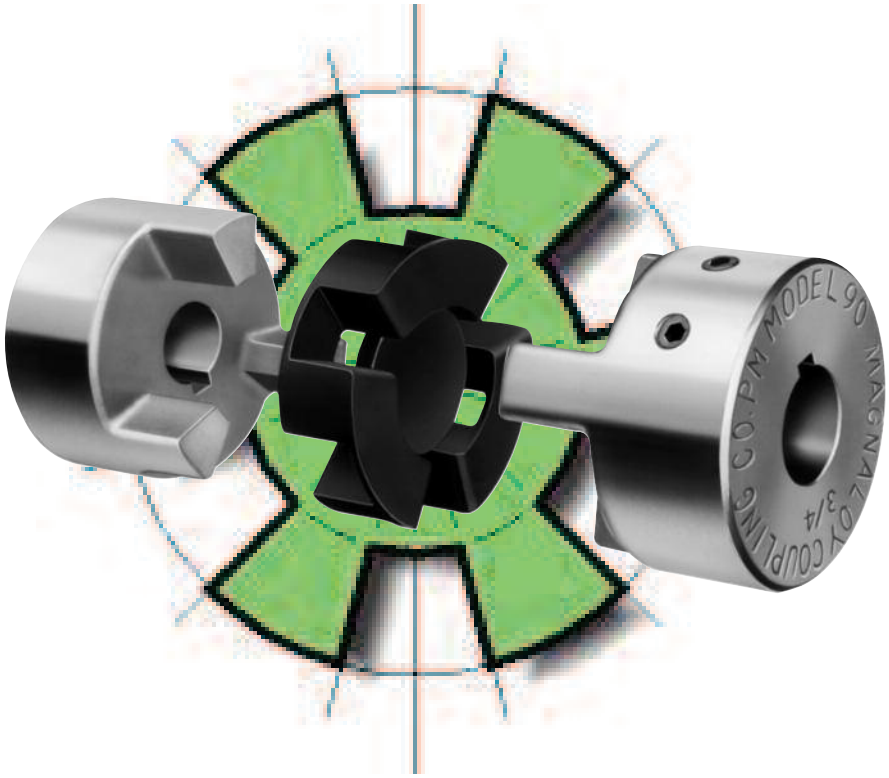

It is a well established fact that the major cause of failure in an elastomeric insert type drive coupling is hysteresis failure which results from overworking the insert by application of cyclic loads and the associated heat generation. These cyclic loads can be internal in origin as a result of coupling design (see page 2) and when coupled with externally applied loads can greatly reduce elastomer life. Specifying Magnaloy's Type PM Coupling with radial designed drive lugs results in true compressive loads and improved insert life.

magnaloy coupling company *501 Commerce Drive Alpena, MI 49707* ***989 356-2186***
A Division of Douville Johnston Corporation *Fax: 989 354-4190* *http://www.magnaloy.com*

Model PM90 Performance Specifications

Maximum Bore	Minimum Bore	Insert Number	Torque Rating (in lb)	HP Rating per 100 RPM	Torsional Rigidity (in lb/deg)	Complete Coupling Approx Weight (lb)		Wr^2 (lb ft^2) (solid)
						Solid	Max Bore	
1 1/8	7/16	P097N7	224	0.36	38.3	1.8	1.3	0.946
		P097U9	336	0.54	69.9			
		P097H5	672	1.08	158.7			

1

Model PM90 Dimensional Specifications

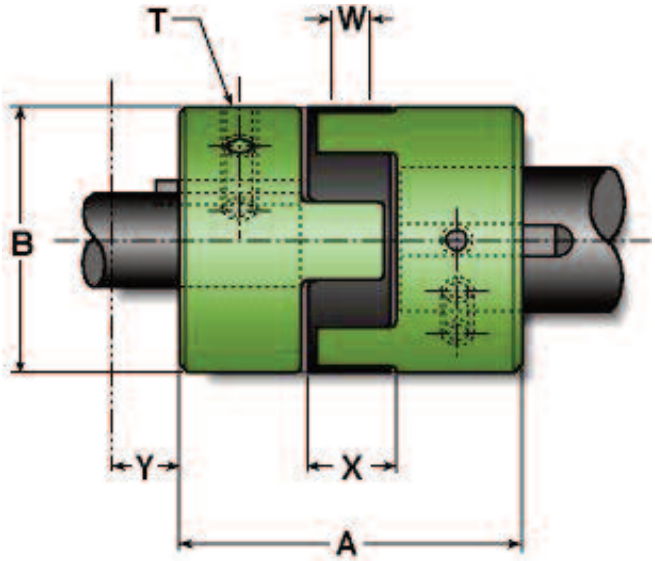

A -	Over all length (Assembled) - 2.78
B -	Outside Diameter - 2.125
T -	Set Screw Size - 1/4-20 UNC, 2 places
W -	Distance between shaft ends - 3/16 min
X -	Distance between shaft ends - 3/4 max
Y -	Hub movement required for insert removal - 1.20 total

Notes

magnaloy coupling company *501 Commerce Drive Alpena, MI 49707* ***989 356-2186***
A Division of Douville Johnston Corporation *Fax: 989 354-4190* *http://www.magnaloy.com*

Model PM90 - Standard Bore / Keyway Sizes (per AGMA Class 1, Clearance Fit)

Part Number	Bore & Keyway Combinations	Bore Size**	Key Width	Key Depth	Set Screw	
					Size	Quantity
P090014N	7/16 x No Key	0.4375 / 0.4385	0.0938 / 0.0958	-	1/4-20 UNC	1
P09001403	7/16 x 3/32	0.4375 / 0.4385	0.125 / 0.127	0.484 / 0.495	1/4-20 UNC	1
P09001404	7/16 x 1/8	0.4375 / 0.4385	0.125 / 0.127	0.496 / 0.507	1/4-20 UNC	2
P09001604	1/2 x 1/8	0.500 / 0.501	0.125 / 0.127	0.560 / 0.571	1/4-20 UNC	2
P09001804	9/16 x 1/8	0.5625 / 0.5635	0.125 / 0.127	0.623 / 0.634	1/4-20 UNC	2
P09002005	5/8 x 5/32	0.625 / 0.626	0.1562 / 0.1582	0.698 / 0.709	1/4-20 UNC	2
P09002006	5/8 x 3/16	0.625 / 0.626	0.1875 / 0.1895	0.709 / 0.720	1/4-20 UNC	2
P09002206	11/16 x 3/16	0.6875 / 0.6885	0.1875 / 0.1895	0.773 / 0.784	1/4-20 UNC	2
P09002404	3/4 x 1/8	0.750 / 0.751	0.125 / 0.127	0.812 / 0.823	1/4-20 UNC	2
P09002406	3/4 x 3/16	0.750 / 0.751	0.1875 / 0.1895	0.837 / 0.848	1/4-20 UNC	2
P09002806	7/8 x 3/16	0.875 / 0.876	0.1875 / 0.1895	0.964 / 0.975	1/4-20 UNC	2
P09002808	7/8 x 1/4	0.875 / 0.876	0.250 / 0.252	0.982 / 0.993	1/4-20 UNC	2
P09010006	1 x 3/16	1.000 / 1.001	0.1875 / 0.1895	1.090 / 1.101	1/4-20 UNC	2
P09010008	1 x 1/4	1.000 / 1.001	0.250 / 0.252	1.114 / 1.125	1/4-20 UNC	2
P09010408	1 1/8 x 1/4	1.125 / 1.126	0.205 / 0.252	1.241 / 1.252	1/4-20 UNC	2

** Shaded combinations are Semi-special - see price sheet*

*** Other Bore/Keyway combinations are available. Consult factory for quotation.*

Model PM90 Bore Tolerances

Feature	Tolerance
Bore	-.000 / +.001
Key Width	-.000 / +.002
Key Depth	+.005 / +.016

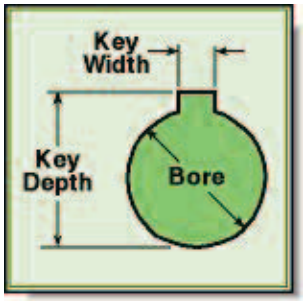

As with Magnaloy's standard line of couplings, insert elastomer selection allows variable performance characteristics. Insert design eliminates metal-to-metal contact and assures electrical isolation of shafts.

Nitrile, 70A Durometer.....
Standard elastomer material offering excellent resistance to petroleum products and superior compression set characteristics.

Urethane, 90A Durometer.....
Excellent mechanical and physical properties. *Note:* Urethane material tends to soften when exposed to elevated temperatures or humid conditions.

Hytrel, 50D Durometer....
Superior mechanical and physical properties and offers excellent fluid compatibility and high temperature characteristics.

Additional insert materials available upon request from factory.
See page 7 for additional information on insert selection.

magnaloy coupling company *501 Commerce Drive Alpena, MI 49707* ***989 356-2186***
A Division of Douville Johnston Corporation *Fax: 989 354-4190* *http://www.magnaloy.com*

SECTION 2

MAGNALOY PUMP/MOTOR MOUNTS

NOTE: Due to Magnaloy's policy of continuous improvement, specificaitons are subject to change without notice.
Check with the factory or our Web Site at www.magnaloy.com for the latest information.

magnaloy coupling company *501 Commerce Drive Alpena, MI 49707* ***989 356-2186***
A Division of Douville Johnston Corporation *Fax: 989 354-4190* *http://www.magnaloy.com*

Magnaloy Pump/Motor Mounts

Power Unit design is greatly simplified by use of the Magnaloy Pump/Motor Mount. Direct mounting of flange mount pumps to NEMA C'Face motors or Pilot mount engines via a Magnaloy Mount assures accurate shaft alignment and eliminates the need for a coupling guard, foot brackets, shims, risers and mounting plate. The result is the easiest to install, most accurate and cost effective method available to mount a pump to a drive unit. **For over 30 years** Magnaloy has produced the highest quality flexible drive couplings in the industry. Magnaloy's long tradition of high quality and immediate delivery has become an industry goal for other manufacturers to attain. Every mount Magnaloy manufactures is guaranteed to be within .003 inch concentric from the motor pilot to the pump pilot. Further, the mounting faces are parallel to each other and perpendicular to the pilot centerline within .002 inch. These exacting tolerances mean accurate shaft alignment which helps prolong bearing, seal and coupling life in addition to reducing noise and vibration. Other mount manufacturers talk about quality, but Magnaloy puts it in writing with measurable standards (see Illustration A).

Magnaloy is the most complete, single source for Horizontal, Vertical and Engine requirements. A large selection of SAE and Metric pump mounting flanges to NEMA motors and I.C. Engines in a variety of lengths are available from stock for immediated shipment. OR special requirements can be met from our complete offering of Welded Steel Mounts. Whatever your mounting needs, you need look no further than Magnaloy.

Consult your Magnaloy Distributor for Magnaloy's Product CD ROM which includes the Magnaloy Pump/Motor Mount Selection Program.

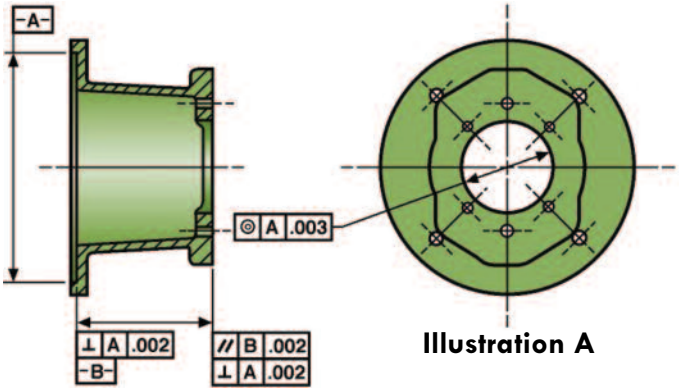

Illustration A

Magnaloy Cast Aluminum Mounts

MAGNALOY CAST ALUMINUM MOUNTS are permanent mold cast of lightweight, high strength aluminum alloy and incorporate many unique design features. Custom molded OSHA orange coupling access covers are included for mounts larger than motor group size 056. These covers are quickly and securely retained via a lip-tab on one end and a single self-tapping screw on the other. Magnaloy's horizontal mounts are supplied with a pre-cast drain hole for residual fluids. This unique feature assists in quick detection of leaky seals and other trouble areas.

Using Magnaloy's Pump/Motor Mounts ensure a lightweight, high strength, precision mount for efficient assembly, quiet operation, accurate shaft alignment and complete coupling concealment.

Magnaloy Horizontal Pump/Motor Mounts

MAGNALOY'S HORIZONTAL PUMP/MOTOR MOUNTS are available for mounting NEMA C'Face motors in frame sizes 56C through 449TSC to most SAE and Metric 2 and 4 bolt pump flanges.

A MOUNT KIT is included which contains all the bolts and washers required to attach the pump and motor to the mount.

Horizontal Mount Selection Method

1. Check TABLES 2 thru 5 to determine pump flange size.
2. Measure the pump shaft length from the shaft end to the flange mounting face and ADD to the motor shaft length shown in TABLE 6. An additional 1/16 inch (minimum) is recommended for shaft end clearance.
3. Refer to the appropriate TABLE (7 thru 11) according to the NEMA motor frame size and locate the applicable pump flange selection form STEP 1, above.
4. Select the mount length option (dimension 'XM' or 'M' in tables) based on the minimum length determined in STEP 2, above.
5. Check for proper clearance between the mount inner surfaces and the coupling O.D. (dimension 'Z' and 'CL' in tables). Dimensional data for Magnaloy Couplings is shown in TABLE 1 for reference. A complete Magnaloy Coupling catalog is available upon request or visit *www.magnaloy.com*.

Consult your Magnaloy Distributor for Magnaloy's Product CD ROM which includes the Magnaloy Pump/Motor Mount Selection Program for easy, computerized mount selection.

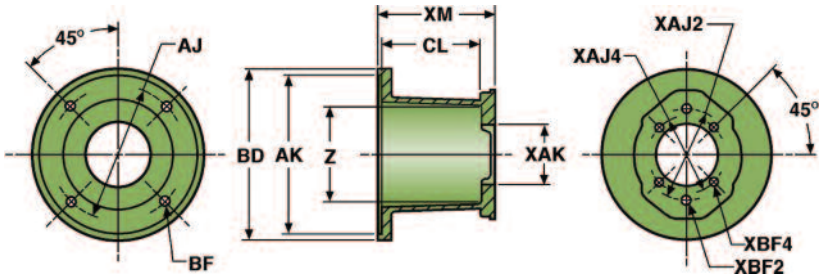

TABLE 7 - NEMA Frames 56C, 143TC/145TC, 182UC/184UC

Horizontal Mounting (or Vertical Mounting - Option A)

MOTOR END DATA

RADIAL CLEARANCE "Z" = 4.15

AJ 5.88	BF 7/16	BD 6.81	AK 4.501	XAK	XAJ2	XBF2	XAJ4	XBF4	MOUNT NO.	CL	XM	MOUNT NO.	CL	XM	MOUNT NO.	CL	XM
USA4F17	4 Bolt	1.782					2.84	5/16-18	M056354F	2.81	3.50	M056424F	3.56	4.25	M056454F	3.81	4.50
SAE AA	2 Bolt	2.001	3.25	3/8-16					M056352AA	2.81	3.50	M056422AA	3.56	4.25	M056452AA	3.81	4.50
SAE A	2(4) Bolt	3.251	4.19	3/8-16	4.12	3/8-16			M056352A	2.81	3.50	M056422A	3.56	4.25	M056452A	3.81	4.50
80 2A/B4	2(4) Bolt	80.01mm	109mm	3/8-16	103mm	5/16-18			M0563580M	2.81	3.50	M0564280M	3.56	4.25	M0564580M	3.81	4.50
80 S4	4 Bolt	80.01mm			100mm	5/16-18			M0563580MS	2.81	3.50	M0564280MS	3.56	4.25	M0564580MS	3.81	4.50
PUMP FLANGE			PUMP END DATA						3.50 LENGTH			4.25 LENGTH			4.50 LENGTH		

MOTOR END DATA

RADIAL CLEARANCE "Z" = 4.15

*** RADIAL CLEARANCE "Z" = 4.10**

AJ 5.88	BF 7/16	BD 6.81	AK 4.501	XAK	XAJ2	XBF2	XAJ4	XBF4	MOUNT NO.	CL	XM	MOUNT NO.	CL	XM
USA4F17	4 Bolt	1.782					2.84	5/16-18	M056504F	4.31	5.00	M056524F	4.56	5.25
SAE AA	2 Bolt	2.001	3.25	3/8-16					M056502AA	4.31	5.00	M056522AA	4.56	5.25
SAE A	2(4) Bolt	3.251	4.19	3/8-16	4.12	3/8-16			M056502A	4.31	5.00	M056522A	4.56	5.25
SAE B	2(4) Bolt	4.001	5.75	1/2-13	5.00	1/2-13			M056502B*	3.93	5.00	M056522B*	4.18	5.25
80 2A/B4	2(4) Bolt	80.01mm	109mm	3/8-16	103mm	5/16-18			M0565080M	4.31	5.00	M0565280M	4.56	5.25
80 S4	4 Bolt	80.01mm			100mm	5/16-18			M0565080MS	4.31	5.00	M0565280MS	4.56	5.25
80 S4	4 Bolt	80.01mm			100mm	5/16-18			M05650100M*	3.93	5.00	M05652100M*	4.18	5.25
PUMP FLANGE			PUMP END DATA						5.00 LENGTH			5.25 LENGTH		

magnaloy coupling company *501 Commerce Drive Alpena, MI 49707* ***989 356-2186***
A Division of Douville Johnston Corporation *Fax: 989 354-4190* *http://www.magnaloy.com*

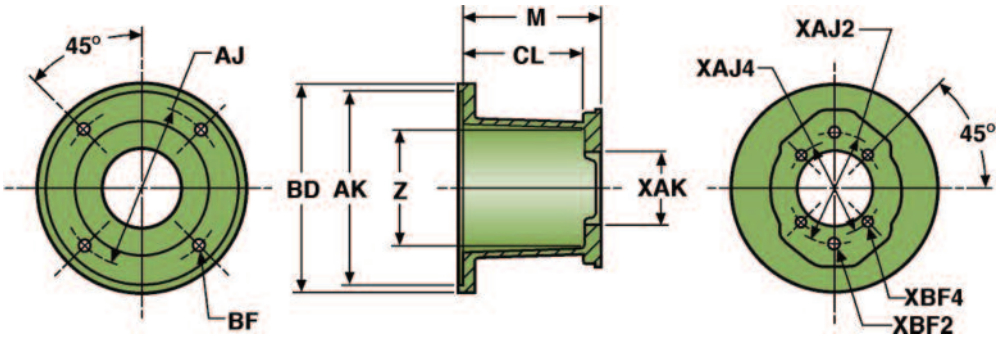

TABLE 8A - NEMA Frames 182TC - 256TC, 213UC - 256UC

Horizontal Mounting (or Vertical Mounting - Option A)

MOTOR END DATA

AJ 7.25 **BF** 17/32 **BD** 9.00 **AK** 8.501

RADIAL CLEARANCE "Z" = 5.00

182-A Casting

PUMP FLANGE		XAK	XAJ2	XBF2	XAJ4	XBF4	MOUNT NO.	CL	M	MOUNT NO.	CL	M	MOUNT NO.	CL	M
USA4F17	4 Bolt	1.782			2.84	5/16-18	M182474F	4.00	4.75	M182504F	4.31	5.00	M182524F	4.31	5.25
SAE AA	2 Bolt	2.001	3.25	3/8-16			M182472AA	4.00	4.75	M182502AA	4.31	5.00	M182522AA	4.31	5.25
SAE A	2(4) Bolt	3.251	4.19	3/8-16	4.12	3/8-16	M182472A	4.00	4.75	M182502A	4.31	5.00	M182522A	4.31	5.25
80 2A/B4	2(4) Bolt	80.01mm	109mm	3/8-16	103mm	5/16-18	M1824780M	4.00	4.75	M1825080M	4.31	5.00	M1825280M	4.31	5.25
80 S4	4 Bolt	80.01mm			100mm	5/16-18	M1824780MS	4.00	4.75	M1825080MS	4.31	5.00	M1825280MS	4.31	5.25
			PUMP END DATA				4.75 LENGTH			5.0 LENGTH			5.25 LENGTH		

MOTOR END DATA

AJ 7.25 **BF** 17/32 **BD** 9.00 **AK** 8.501

RADIAL CLEARANCE "Z" = 5.00

PUMP FLANGE		XAK	XAJ2	XBF2	XAJ4	XBF4	MOUNT NO.	CL	M	MOUNT NO.	CL	M
USA4F17	4 Bolt	1.782			2.84	5/16-18	M182584F	5.06	5.81	M182684F	6.06	6.81
SAE AA	2 Bolt	2.001	3.25	3/8-16			M182582AA	5.06	5.81	M182682AA	6.06	6.81
SAE A	2(4) Bolt	3.251	4.19	3/8-16	4.12	3/8-16	M182582A	5.06	5.81	M182682A	6.06	6.81
80 2A/B4	2(4) Bolt	80.01mm	109mm	3/8-16	103mm	5/16-18	M1825880M	5.06	5.81	M1826880M	6.06	6.81
80 S4	4 Bolt	80.01mm			100mm	5/16-18	M1825880MS	5.06	5.81	M1826880MS	6.06	6.81
			PUMP END DATA				5.81 LENGTH			6.81 LENGTH		

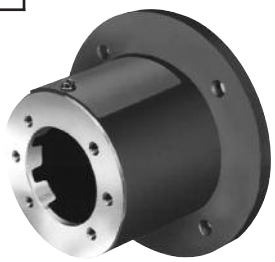

TABLE 8B - NEMA Frames 182TC - 256TC, 213UC - 256UC

Horizontal Mounting

MOTOR END DATA

AJ 7.25 **BF** 17/32 **BD** 9.00 **AK** 8.501

RADIAL CLEARANCE "Z" = 5.00

182-B Casting

PUMP FLANGE		XAK	XAJ2	XBF2	XAJ4	XBF4	MOUNT NO.	CL	M	MOUNT NO.	CL	M	MOUNT NO.	CL	M
SAE B	2(4) Bolt	4.001	5.75	1/2-13	5.00	1/2-13	M182522B	4.50	5.25	M182582B	5.06	5.81	M182602B	5.25	6.00
SAE C	2(4) Bolt	5.001	7.12	5/8-11	6.38	1/2-13	M182522C	4.50	5.25	M182582C	5.06	5.81	M182602C	5.25	6.00
100 A2/B4	2(4) Bolt	100.01mm	140mm	1/2-13	125mm	3/8-16	M18252100M	4.50	5.25	M18258100M	5.06	5.81	M18260100M	5.25	6.00
125 A2/B4	2(4) Bolt	125.01mm	180mm	5/8-11	160mm	1/2-13	M18252125M	4.50	5.25	M18258125M	5.06	5.81	M18260125M	5.25	6.00
			PUMP END DATA				5.25 LENGTH			5.81 LENGTH			6.00 LENGTH		

MOTOR END DATA

AJ 7.25 | BF 17/32 | BD 9.00 | AK 8.501

RADIAL CLEARANCE "Z" = 5.00

		XAK	XAJ2	XBF2	XAJ4	XBF4	MOUNT NO.	CL	M	MOUNT NO.	CL	M
SAE B	2(4) Bolt	4.001	5.75	1/2-13	5.00	1/2-13	M182682B	6.06	6.81	M182702B	6.25	7.00
SAE C	2(4) Bolt	5.001	7.12	5/8-11	6.38	1/2-13	M182682C	6.06	6.81	M182702C	6.25	7.00
100 A2/B4	2(4) Bolt	100.01mm	140mm	1/2-13	125mm	3/8-16	M18268100M	6.06	6.81	M18270100M	6.25	7.00
125 A2/B4	2(4) Bolt	125.01mm	180mm	5/8-11	160mm	1/2-13	M18268125M	6.06	6.81	M18270125M	6.25	7.00

PUMP FLANGE | PUMP END DATA | 6.81 LENGTH | 7.00 LENGTH

TABLE 9 - NEMA Frames 284TC/TSC - 286TC/TSC, 284UC/286UC

2

MOTOR END DATA

AJ 9.00 | BF 17/32 | BD 11.00 | AK 10.501

RADIAL CLEARANCE "Z" = 6.40

		XAK	XAJ2	XBF2	XAJ4	XBF4	MOUNT NO.	CL	M	MOUNT NO.	CL	M	MOUNT NO.	CL	M
SAE A	2(4) Bolt	3.251	4.19	3/8-16	4.12	3/8-63	M284682A	6.00	6.88	M284752A	6.62	7.50	M284862A	7.81	8.69
SAE B	2(4) Bolt	4.001	5.75	1/2-13	5.00	1/2-13	M284682B	6.00	6.88	M284752B	6.62	7.50	M284862B	7.81	8.69
SAE C	2(4) Bolt	5.001	7.12	5/8-11	6.38	1/2-13	M284682C	6.00	6.88	M284752C	6.62	7.50	M284862C	7.81	8.69
80 A2/B4	2(4) Bolt	80.01mm	109mm	3/8-16	103mm	5/16-18	M2846880M	6.00	6.88	M2847580M	6.62	7.50	M2848680M	7.81	8.69
80 S4	4 Bolt	80.01mm			100mm	5/16-18	M2846880MS	6.00	6.88	M2847580MS	6.62	7.50	M2848680MS	7.81	8.69
100 A2/B4	2(4) Bolt	100.01mm	140mm	1/2-13	125mm	3/8-16	M28468100M	6.00	6.88	M28475100M	6.62	7.50	M28486100M	7.81	8.69
125 A2/B4	2(4) Bolt	125.01mm	180mm	5/8-11	160mm	1/2-13	M28468125M	6.00	6.88	M28475125M	6.62	7.50	M28486125M	7.81	8.69

PUMP FLANGE | PUMP END DATA | 6.88 LENGTH | 7.50 LENGTH | 8.69 LENGTH

TABLE 10 - NEMA Frames 324TC/TSC - 405TC/TSC, 324UC/USC - 405UC/USC

MOTOR END DATA

AJ 11.00 | BF 21/32 | BD 14.00 | AK 12.501

RADIAL CLEARANCE "Z" = 7.74

		XAK	XAJ2	XBF2	XAJ4	XBF4	MOUNT NO.	CL	M	MOUNT NO.	CL	M
SAE B	2(4) Bolt	4.001	5.75	1/2-13	5.00	1/2-13	M324762B	6.75	7.62	M324872B	7.88	8.75
SAE C	2(4) Bolt	5.001	7.12	5/8-11	6.38	1/2-13	M324762C	6.75	7.62	M324872C	7.88	8.75
SAE D	2(4) Bolt	6.001	9.00	3/4-10	9.00	3/4-10	M324762D	6.75	7.62	M324872D	7.88	8.75
100 A2/B4	2(4) Bolt	100.01mm	140mm	1/2-13	125mm	3/8-16	M32476100M	6.75	7.62	M32487100M	7.88	8.75
125 A2/B4	2(4) Bolt	125.01mm	180mm	5/8-11	160mm	1/2-13	M32476125M	6.75	7.62	M32487125M	7.88	8.75
160 A2/B4	2(4) Bolt	160.01mm	224mm	3/4-10	200mm	5/8-11	M32476160M	6.75	7.62	M32487160M	7.88	8.75
180 B4	4 Bolt	180.01mm			224mm	5/8-11	M32476180M	6.75	7.62	M32487180M	7.88	8.75

PUMP FLANGE | PUMP END DATA | 7.62 LENGTH | 8.75 LENGTH

TABLE 11 - NEMA Frames 444TC/TSC - 449TC/TSC, 444UC/USC - 445UC/USC

MOTOR END DATA

AJ 14.00 | BF 21/32 | BD 18.00 | AK 16.001

RADIAL CLEARANCE "Z" = 10.75

		XAK	XAJ2	XBF2	XAJ4	XBF4	MOUNT NO.	CL	M
SAE C	2(4) Bolt	5.001	7.12	5/8-11	6.38	1/2-13	M444882C	7.12	8.88
SAE D	2(4) Bolt	6.001	9.00	3/4-10	9.00	3/4-10	M444882D	7.12	8.88
SAE E	2 Bolt	6.501	12.50	1-8			M444882E	7.12	8.88

PUMP FLANGE | PUMP END DATA | 8.88 LENGTH

magnaloy coupling company 501 Commerce Drive Alpena, MI 49707 989 356-2186
A Division of Douville Johnston Corporation Fax: 989 354-4190 http://www.magnaloy.com

MAGNALOY VERTICAL PUMP/MOTOR MOUNTS are

designed to allow direct mounting through the reservoir top. The pump and mount assembly is enclosed inside the reservoir resulting in a safer, quieter, more compact installation. Vertical mounts are available in NEMA C'face motor frame sizes 56C through 256TC to most SAE and Metric 2 and 4 bolt pump flanges. Two mounting options are available to give added flexibility in vertical power unit design.

A MOUNT KIT is included which contains all bolts and washers required to attach the pump and motor to the mount. The kit DOES NOT contain hardware for attaching the mount to the reservoir.

Vertical Mount Selection Method

1. Check TABLES 2 thru 5 to determine pump flange size.
2. Measure the pump shaft length from the shaft end to the flange mounting face and ADD to the motor shaft length shown in TABLE 6. An additional 1/16 inch (minimum) is recommended for shaft end clearance.
3. Determine mounting option desired as shown in Illustration B, C, D and E depending on the NEMA frame size.
4. Refer to the appropriate TABLE (7, 8A, 12 or 13) according to the NEMA motor frame size and locate the applicable pump flange selection form STEP 1, above. NOTE: Option A for vertical mounting NEMA 182TC through 256TC is applicable ONLY to SAE-A and smaller pump flanges.
5. Select the mount length option (dimension 'XM' or 'M' in tables) based on the minimum length determined in STEP 2, above.
6. Check for proper clearance between the mount inner surfaces and the coupling O.D. (dimension 'Z' and 'CL' in tables). Dimensional data for Magnaloy Couplings is shown in TABLE 1 for reference. A complete Magnaloy Coupling catalog is available upon request or visit *www.magnaloy.com*.

Consult your Magnaloy Distributor for Magnaloy's Product CD ROM which includes the Magnaloy Pump/Motor Mount Selection Program for easy, computerized mount selection.

NEMA Frame 56C thru 145TC Vertical Mounting

OPTION A

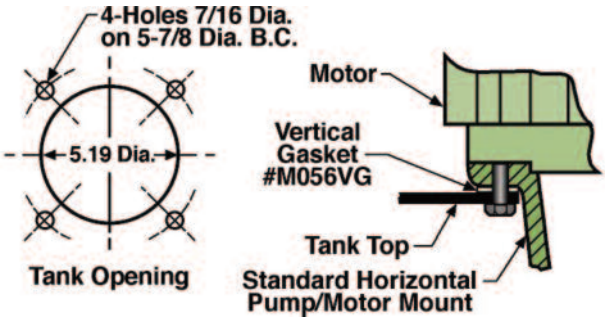

Illustration B

This economical vertical mounting option allows Tank Top Drop-thru mounting for ease of assembly and utilizes the standard horizontal mount and a sealing gasket.

To order OPTION A, specify the Horizontal Pump/Motor Mount number from TABLE 7 and Vertical Gasket number M056VG.

OPTION B

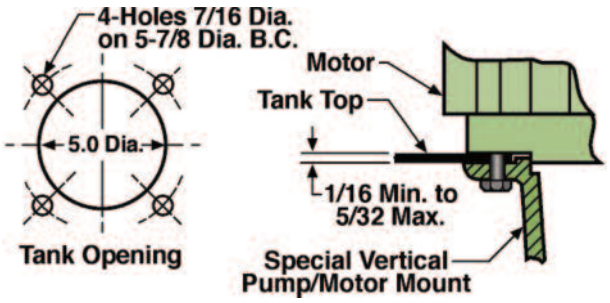

Illustration C

This mounting option requires inside tank access to position the mount/pump sub-assembly through the tank top opening.

To order OPTION B, specify the Vertical Pump/Motor Mount number from TABLE 12 followed with the letter 'V' as shown in TABLE 12. No gasket is required with this mounting option.

TABLE 12 - NEMA Frame 56C, 143TC/145TC, 182UC/184UC

MOTOR END DATA

AJ 5.88 | BF 7/16 | BD 6.81 | AK 4.501

RADIAL CLEARANCE "Z" = 4.15

PUMP FLANGE		XAK	XAJ2	XBF2	XAJ4	XBF4	MOUNT NO.	CL	XM	MOUNT NO.	CL	XM	MOUNT NO.	CL	XM
USA4F17	4 Bolt	1.782			2.84	5/16-18	M056354FV	2.81	3.50	M056424FV	3.56	4.25	M056454FV	3.81	4.50
SAE AA	2 Bolt	2.001	3.25	3/8-16			M056352AAV	2.81	3.50	M056422AAV	3.56	4.25	M056452AAV	3.81	4.50
SAE A	2(4) Bolt	3.251	4.19	3/8-16	4.12	3/8-16	M056352AV	2.81	3.50	M056422AV	3.56	4.25	M056452AV	3.81	4.50
80 A2/B4	2(4) Bolt	80.01mm	109mm	3/8-16	103mm	5/16-18	M0563580MV	2.81	3.50	M0564280MV	3.56	4.25	M0564580MV	3.81	4.50
80 S4	4 Bolt	80.01mm			100mm	5/16-18	M0563580MSV	2.81	3.50	M0564280MSV	3.56	4.25	M0564580MSV	3.81	4.50
		PUMP END DATA					3.50 LENGTH			4.25 LENGTH			4.50 LENGTH		

2

MOTOR END DATA

AJ 5.88 | BF 7/16 | BD 6.81 | AK 4.501

RADIAL CLEARANCE "Z" = 4.15
*RADIAL CLEARANCE "Z" = 4.10

PUMP FLANGE		XAK	XAJ2	XBF2	XAJ4	XBF4	MOUNT NO.	CL	XM	MOUNT NO.	CL	XM
USA4F17	4 Bolt	1.782			2.84	5/16-18	M056504FV	4.31	5.00	M056524FV	4.56	5.25
SAE AA	2 Bolt	2.001	3.25	3/8-16			M056502AAV	4.31	5.00	M056522AAV	4.56	5.25
SAE A	2(4) Bolt	3.251	4.19	3/8-16	4.12	3/8-16	M056502AV	4.31	5.00	M056522AV	4.56	5.25
SAE B	2(4) Bolt	4.001	5.75	1/2-13	5.00	1/2-13	M056502BV*	3.93	5.00	M056522BV	4.18	5.25
80 A2/B4	2(4) Bolt	80.01mm	109mm	3/8-16	103mm	5/16-18	M0565080MV	4.31	5.00	M0565280MV	4.56	5.25
80 S4	4 Bolt	80.01mm			100mm	5/16-18	M0565080MSV	4.31	5.00	M0565280MSV	4.56	5.25
100 A2/B4	2(4) Bolt	100.01mm	140mm	1/2-13	125mm	3/8-16	M05650100MV*	3.93	5.00	M05652100MV*	4.18	5.25
		PUMP END DATA					5.00 LENGTH			5.25 LENGTH		

NOTE:
See drawing on top of page 21 for dimensional references

NEMA Frame 182TC thru 256TC Vertical Mounting

OPTION A

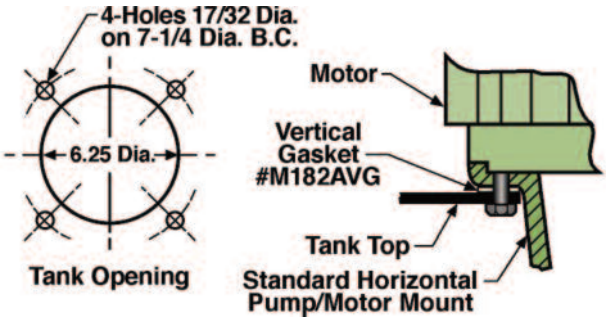

Illustration D

This mounting option offers an economical alternative to OPTION B, but is available with SAE-A pump flanges and smaller only. OPTION A utilizes the standard horizontal mount and a sealing gasket.

To order OPTION A, specify the Horizontal Pump/Motor Mount number from TABLE 8 and Vertical Gasket number M182AVG.

OPTION B

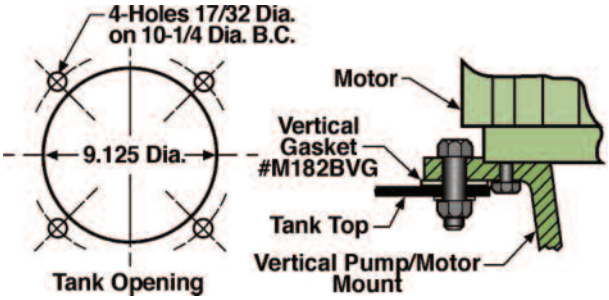

Illustration E

This option utilizes an oversize mounting flange on the motor end of the mount and requires a larger diameter tank top opening giving additional working clearances for assembly to reservoir. Mounting OPTION B is available in the pump/motor length combinations shown in TABLE 13.

To order OPTION B, specify the Vertical Pump/Motor Mount number from TABLE 13 followed with the letter 'V' as shown in TABLE 13. The required Vertical Gasket, number M182BVG is included.

magnaloy coupling company *501 Commerce Drive Alpena, MI 49707* ***989 356-2186***
A Division of Douville Johnston Corporation *Fax: 989 354-4190* *http://www.magnaloy.com*

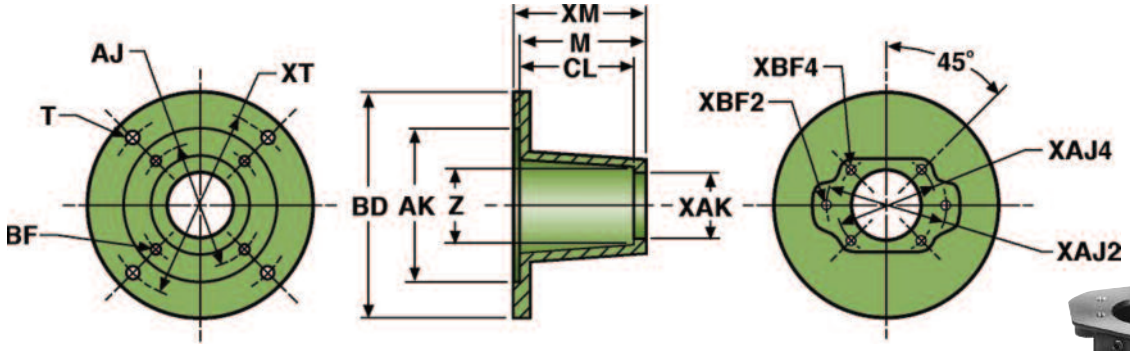

TABLE 13 - NEMA Frames 182TC - 256TC, 213UC/256UC

RADIAL CLEARANCE "Z" = 5.00
MOUNTING BOLT HOLE DIAMETER "T" = 17/32
MOUNTING HOLE BOLT CIRCLE "XT" = 10.25

MOTOR END DATA AJ	BF	BD	AK	XAK	XAJ2	XBF2	XAJ4	XBF4	MOUNT NO.	CL	M	MOUNT NO.	CL	M	MOUNT NO.	CL	M
7.25	17/32	11.50	8.501														
USA4F17	4 Bolt			1.782			2.84	5/16-18	M182504FV	4.31	5.00	M182524FV	4.31	5.25	M182584FV	5.06	5.81
SAE AA	2 Bolt			2.001	3.25	3/8-16			M182502AAV	4.31	5.00	M182522AAV	4.31	5.25	M182582AAV	5.06	5.81
SAE A	2(4) Bolt			3.251	4.19	3/8-16	4.12	3/8-16	M182502AV	4.31	5.00	M182522AV	4.31	5.25	M182582AV	5.06	5.81
SAE B	2(4) Bolt			4.001	5.75	1/2-13	5.00	1/2-13				M182522BV	4.50	5.25	M182582BV	5.06	5.81
SAE C	2(4) Bolt			5.001	7.12	5/8-11	6.38	1/2-13				M182522CV	4.50	5.25	M182582CV	5.06	5.81
80 A2/B4	2(4) Bolt			80.01mm	109mm	3/8-16	103mm	5/16-18	M1825080MV	4.31	5.00	M1825280MV	4.31	5.25	M1825880MV	5.06	5.81
80 S4	4 Bolt			80.01mm			100mm	5/16-18	M1825080MSV	4.31	5.00	M1825280MSV	4.31	5.25	M1825880MSV	5.06	5.81
100 A2/B4	2(4) Bolt			100.01mm	140mm	1/2-13	125mm	3/8-16				M18252100MV	4.50	5.25	M18258100MV	5.06	5.81
250 A2/B4	2(4) Bolt			125.01mm	180mm	5/8-11	160mm	1/2-13				M18252125MV	4.50	5.25	M18258125MV	5.06	5.81
PUMP FLANGE				PUMP END DATA					5.00 LENGTH			5.25 LENGTH			5.81 LENGTH		

RADIAL CLEARANCE "Z" = 5.00
MOUNTING BOLT HOLE DIAMETER "T" = 17/32
MOUNTING HOLE BOLT CIRCLE "XT" = 10.25

MOTOR END DATA AJ	BF	BD	AK	XAK	XAJ2	XBF2	XAJ4	XBF4	MOUNT NO.	CL	M	MOUNT NO.	CL	M
7.25	17/32	11.50	8.501											
USA4F17	4 Bolt			1.782			2.84	5/16-18	M182684FV	6.06	6.81			
SAE AA	2 Bolt			2.001	3.25	3/8-16			M182682AAV	6.06	6.81			
SAE A	2(4) Bolt			3.251	4.19	3/8-16	4.12	3/8-16	M182682AV	6.06	6.81			
SAE B	2(4) Bolt			4.001	5.75	1/2-13	5.00	1/2-13	M182682BV	6.06	6.81	M182702BV	6.25	7.00
SAE C	2(4) Bolt			5.001	7.12	5/8-11	6.38	1/2-13	M182682CV	6.06	6.81	M182702CV	6.25	7.00
80 A2/B4	2(4) Bolt			80.01mm	109mm	3/8-16	103mm	5/16-18	M1826880MV	6.06	6.81			
80 S4	4 Bolt			80.01mm			100mm	5/16-18	M1826880MSV	6.06	6.81			
100 A2/B4	2(4) Bolt			100.01mm	140mm	1/2-13	125mm	3/8-16	M18268100MV	6.06	6.81	M18270100MV	6.25	7.00
250 A2/B4	2(4) Bolt			125.01mm	180mm	5/8-11	160mm	1/2-13	M18268125MV	6.06	6.81	M18270125MV	6.25	7.00
PUMP FLANGE				PUMP END DATA					6.81 LENGTH			7.00 LENGTH		

MAGNALOY'S PUMP/ENGINE MOUNTS are available for mounting SAE flange-mount pumps to gasoline and diesel engines with pilot mounting capabilities. Four basic engine pilot mounting configurations are available from inventory determined by the pilot diameter. Optional sizes are available upon request.

Engine Mount Selection Method

1. Check TABLES 2 thru 5 to determine pump flange size.
2. Determine the Engine Pilot Group from TABLE 14 (other sizes are available, consult factory)
3. Measure the pump shaft length from the shaft end to the flange mounting face and ADD to the engine shaft length measured from the shaft end to the pilot face. An additional 1/16 inch (minimum) is recommended for shaft end clearance.
4. Refer to the appropriate TABLE (15 thru 18) according to the Engine Pilot Group determined in STEP 2, above and locate the applicable pump flange selection form STEP 1, above.
5. Select the mount length option (dimension 'XM' in tables) based on the minimum length determined in STEP 3, above.
6. Check for proper clearance between the mount inner surfaces and the coupling O.D. (dimension 'Z' and 'CL' in tables). Dimensional data for Magnaloy Couplings is shown in TABLE 1 for reference. A complete Magnaloy Coupling catalog is available upon request or visit *www.magnaloy.com*.

Consult your Magnaloy Distributor for Magnaloy's Product CD ROM which includes the Magnaloy Pump/Motor Mount Selection Program for easy, computerized mount selection.

TABLE 14 - Engine Pilot Groups

Size	K	J
E575	5.75	6.50
E644	6.437	7.75
E700	7.00	7.75
E787	7.875	9.25
Pilot Group Size	Pilot Dia.	Bolt Circle Dia.

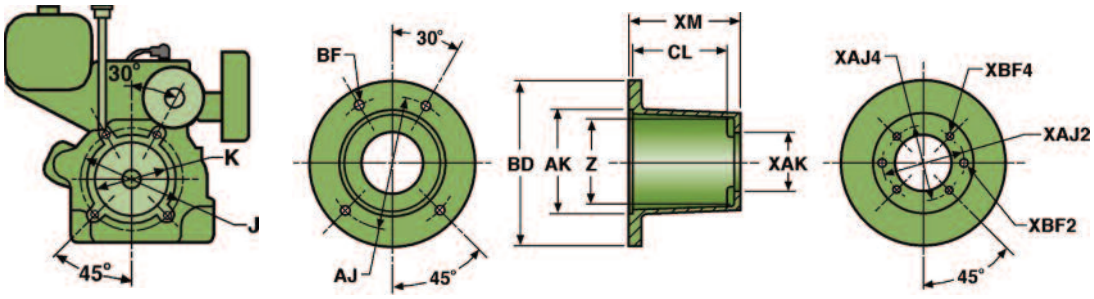

TABLE 15 - E575 Pilot Gasoline and Diesel Engines

ENGINE END DATA: AJ 6.50, BF 13/32, BD 7.50, AK 5.752

RADIAL CLEARANCE "Z" = 4.15 | "Z" = 4.15 | "Z" = 5.00
*RADIAL CLEARANCE "Z" = 4.10 | * "Z" = 4.10

		XAK	XAJ2	XBF2	XAJ4	XBF4	MOUNT NO.	CL	XM	MOUNT NO.	CL	XM	MOUNT NO.	CL	XM
USA4F17	4 Bolt	1.782			2.84	5/16-18	E575504F	4.31	5.00	E575524F	4.56	5.25	E575604F	5.14	6.06
SAE AA	2 Bolt	2.001	3.25	3/8-16			E575502AA	4.31	5.00	E575522AA	4.56	5.25	E575602AA	5.14	6.06
SAE A	2(4) Bolt	3.251	4.19	3/8-16	4.12	3/8-16	E575502A	4.31	5.00	E575522A	4.56	5.25	E575602A	5.14	6.06
SAE B	2(4) Bolt	4.001	5.75	1/2-13	5.00	1/2-13	E575502B*	3.93	5.00	E575522B*	4.18	5.25	E575602B	5.14	6.06
80 A2/B4	2(4) Bolt	80.01mm	109mm	3/8-16	103mm	5/16-18	E5755080M	4.31	5.00	E5755280M	4.56	5.25	E5756080M	5.14	6.06
80 S4	4 Bolt	80.01mm			100mm	5/16-18	E5755080MS	4.31	5.00	E5755280MS	4.56	5.25	E5756080MS	5.14	6.06
100 A2/B4	2(4) Bolt	100.01mm	140mm	1/2-13	125mm	3/8-16	E57550100M*	3.93	5.00	E57552100M*	4.18	5.25	E57560100M	5.14	6.06
PUMP FLANGE			PUMP END DATA				5.00 LENGTH			5.25 LENGTH			6.06 LENGTH **		

** *SOCKET HEAD CAP SCREWS REQUIRED ON ENGINE END, THIS LENGTH ONLY. RADIAL CLEARANCE "Z" = 5.00, THIS LENGTH ONLY.*

magnaloy coupling company *501 Commerce Drive Alpena, MI 49707* ***989 356-2186***
A Division of Douville Johnston Corporation *Fax: 989 354-4190* *http://www.magnaloy.com*

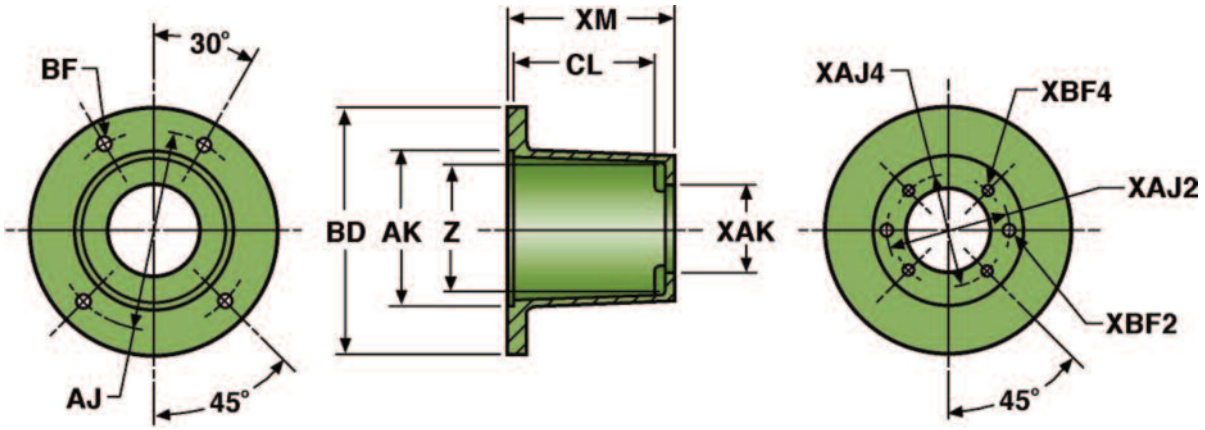

TABLE 16 - E644 Pilot Gasoline and Diesel Engines

ENGINE END DATA

RADIAL CLEARANCE "Z" = 5.00

AJ 7.75	BF 15/32	BD 9.00	AK 6.439	XAK	XAJ2	XBF2	XAJ4	XBF4	MOUNT NO.	CL	XM	MOUNT NO.	CL	XM
USA4F17	4 Bolt			1.782			2.84	5/16-18	E644504F	4.05	5.00	E644554F	4.36	5.50
SAE AA	2 Bolt			2.001	3.25	3/8-16			E644502AA	4.05	5.00	E644552AA	4.36	5.50
SAE A	2(4) Bolt			3.251	4.19	3/8-16	4.12	3/8-16	E644502A	4.05	5.00	E644552A	4.36	5.50
SAE B	2(4) Bolt			4.001	5.75	1/2-13	5.00	1/2-13				E644552B	4.36	5.50
80 A2/B4	2(4) Bolt			80.01mm	109mm	3/8-16	103mm	5/16-18	E6445080M	4.05	5.00	E6445580M	4.36	5.50
80 S4	4 Bolt			80.01mm			100mm	5/16-18	E6445080MS	4.05	5.00	E6445580MS	4.36	5.50
100 A2/B4	2(4) Bolt			100.01mm	140mm	1/2-13	125mm	3/8-16				E64455100M	4.36	5.50
PUMP FLANGE					PUMP END DATA				5.00 LENGTH			5.50 LENGTH		

ENGINE END DATA

RADIAL CLEARANCE "Z" = 5.00

AJ 7.75	BF 15/32	BD 9.00	AK 6.439	XAK	XAJ2	XBF2	XAJ4	XBF4	MOUNT NO.	CL	XM	MOUNT NO.	CL	XM	MOUNT NO.	CL	XM
USA4F17	4 Bolt			1.782			2.84	5/16-18	E644604F	5.11	6.00	E644704F	6.11	7.00			
SAE AA	2 Bolt			2.001	3.25	3/8-16			E644602AA	5.11	6.00	E644702AA	6.11	7.00			
SAE A	2(4) Bolt			3.251	4.19	3/8-16	4.12	3/8-16	E644602A	5.11	6.00	E644702A	6.11	7.00			
SAE B	2(4) Bolt			4.001	5.75	1/2-13	5.00	1/2-13	E644602B	5.11	6.00	E644702B	6.11	7.00	E644722B	6.31	7.25
SAE C	2(4) Bolt			5.001	7.12	5/8-11	6.38	1/2-13	E644602C	5.11	6.00	E644702C	6.11	7.00	E644722C	6.31	7.25
80 A2/B4	2(4) Bolt			80.01mm	109mm	3/8-16	103mm	5/16-18	E6446080M	5.11	6.00	E6447080M	6.11	7.00			
80 S4	4 Bolt			80.01mm			100mm	5/16-18	E6446080MS	5.11	6.00	E6447080MS	6.11	7.00			
100 A2/B4	2(4) Bolt			100.01mm	140mm	1/2-13	125mm	3/8-16	E64460100M	5.11	6.00	E64470100M	6.11	7.00	E64472100M	6.31	7.25
125 A2/B4	2(4) Bolt			125.01mm	180mm	5/8-11	160mm	1/2-13	E64460125M	5.11	6.00	E64470125M	6.11	7.00	E64472125M	6.31	7.25
PUMP FLANGE					PUMP END DATA				6.00 LENGTH			7.00 LENGTH			7.25 LENGTH		

TABLE 17 - E700 Pilot Gasoline and Diesel Engines

ENGINE END DATA

RADIAL CLEARANCE "Z" = 5.00

AJ 7.75	BF 15/32	BD 9.00	AK 7.002	XAK	XAJ2	XBF2	XAJ4	XBF4	MOUNT NO.	CL	XM	MOUNT NO.	CL	XM
USA4F17	4 Bolt			1.782			2.84	5/16-18	E700504F	4.05	5.00	E700554F	4.36	5.50
SAE AA	2 Bolt			2.001	3.25	3/8-16			E700502AA	4.05	5.00	E700552AA	4.36	5.50
SAE A	2(4) Bolt			3.251	4.19	3/8-16	4.12	3/8-16	E700502A	4.05	5.00	E700552A	4.36	5.50
SAE B	2(4) Bolt			4.001	5.75	1/2-13	5.00	1/2-13				E700552B	4.36	5.50
80 A2/B4	2(4) Bolt			80.01mm	109mm	3/8-16	103mm	5/16-18	E7005080M	4.05	5.00	E7005580M	4.36	5.50
80 S4	4 Bolt			80.01mm			100mm	5/16-18	E7005080MS	4.05	5.00	E7005580MS	4.36	5.50
100 A2/B4	2(4) Bolt			100.01mm	140mm	1/2-13	125mm	3/8-16				E70055100M	4.36	5.50
PUMP FLANGE					PUMP END DATA				5.00 LENGTH			5.50 LENGTH		

ENGINE END DATA

RADIAL CLEARANCE "Z" = 5.00

AJ 7.75	BF 15/32	BD 9.00	AK 7.002	XAK	XAJ2	XBF2	XAJ4	XBF4	MOUNT NO.	CL	XM	MOUNT NO.	CL	XM	MOUNT NO.	CL	XM
USA4F17	4 Bolt			1.782			2.84	5/16-18	E700604F	5.11	6.00	E700704F	6.11	7.00			
SAE AA	2 Bolt			2.001	3.25	3/8-16			E700602AA	5.11	6.00	E700702AA	6.11	7.00			
SAE A	2(4) Bolt			3.251	4.19	3/8-16	4.12	3/8-16	E700602A	5.11	6.00	E700702A	6.11	7.00			
SAE B	2(4) Bolt			4.001	5.75	1/2-13	5.00	1/2-13	E700602B	5.11	6.00	E700702B	6.11	7.00	E700722B	6.31	7.25
SAE C	2(4) Bolt			5.001	7.12	5/8-11	6.38	1/2-13	E700602C	5.11	6.00	E700702C	6.11	7.00	E700722C	6.31	7.25
80 A2/B4	2(4) Bolt			80.01mm	109mm	3/8-16	103mm	5/16-18	E7006080M	5.11	6.00	E7007080M	6.11	7.00			
80 S4	4 Bolt			80.01mm			100mm	5/16-18	E7006080MS	5.11	6.00	E7007080MS	6.11	7.00			
100 A2/B4	2(4) Bolt			100.01mm	140mm	1/2-13	125mm	3/8-16	E70060100M	5.11	6.00	E70070100M	6.11	7.00	E70072100M	6.31	7.25
125 A2/B4	2(4) Bolt			125.01mm	180mm	5/8-11	160mm	1/2-13	E70060125M	5.11	6.00	E70070125M	6.11	7.00	E70072125M	6.31	7.25
PUMP FLANGE					PUMP END DATA				6.00 LENGTH			7.00 LENGTH			7.25 LENGTH		

TABLE 18 - E787 Pilot Gasoline and Diesel Engines

ENGINE END DATA

RADIAL CLEARANCE "Z" = 6.40

AJ 9.25	BF 21/32	BD 11.00	AK 7.877	XAK	XAJ2	XBF2	XAJ4	XBF4	MOUNT NO.	CL	XM	MOUNT NO.	CL	XM	MOUNT NO.	CL	XM
SAE A	2(4) Bolt			3.251	4.19	3/8-16	4.12	3/8-16	E787682A	5.80	6.88	E787752A	6.42	7.50	E787862A	7.61	8.69
SAE B	2(4) Bolt			4.001	5.75	1/2-13	5.00	1/2-13	E787682B	5.80	6.88	E787752B	6.42	7.50	E787862B	7.61	8.69
SAE C	2(4) Bolt			5.001	7.12	5/8-11	6.38	1/2-13	E787682C	5.80	6.88	E787752C	6.42	7.50	E787862C	7.61	8.69
80 A2/B4	2(4) Bolt			80.01mm	109mm	3/8-16	103mm	5/16-18	E7876880M	5.80	6.88	E7877580M	6.42	7.50	E7878680M	7.61	8.69
80 S4	4 Bolt			80.01mm			100mm	5/16-18	E7876880MS	5.80	6.88	E7877580MS	6.42	7.50	E7878680MS	7.61	8.69
100 A2/B4	2(4) Bolt			100.01mm	140mm	1/2-13	125mm	3/8-16	E78768100M	5.80	6.88	E78775100M	6.42	7.50	E78786100M	7.61	8.69
125 A2/B4	2(4) Bolt			125.01mm	180mm	5/8-11	160mm	1/2-13	E78768125M	5.80	6.88	E78775125M	6.42	7.50	E78786125M	7.61	8.69
PUMP FLANGE					PUMP END DATA				6.88 LENGTH			7.50 LENGTH			8.69 LENGTH		

magnaloy coupling company 501 Commerce Drive Alpena, MI 49707 989 356-2186
A Division of Douville Johnston Corporation Fax: 989 354-4190 http://www.magnaloy.com

MAGNALOY'S WELDED STEEL MOUNTS are available for special mounting requirements where the standard aluminum mount is not available or where a steel mount is required. These mounts are manufactured with the same quality and precision of the standard aluminum mounts and are guaranteed to meet Magnaloy's minimum quality measurements shown in Illustration A, page 17. Magnaloy's Welded Steel Mounts are available for horizontal, vertical and engine applications in a nearly limitless choice of lengths in 1/4 inch increments.
MOUNTING KITS are included as with the cast aluminum mounts.

Magnaloy Horizontal Welded Steel Pump/Motor Mounts

MAGNALOY'S HORIZONTAL WELDED STEEL MOUNTS are available for metric motor and metric pump dimensions in addition to NEMA motors and SAE pumps listed, consult factory for special requirements. To select a welded steel horizontal mount follow the selection method detailed on page 18. The length determined will be the minimum length recommended, additional length can be added depending upon coupling selection, consult factory for further assistance.

TABLE 19 - NEMA 56C, 143TC/145TC, 182UC/184UC

MOTOR END DATA
AJ 5.88 **BF** 7/16 **BD** 6.81 **AK** 4.501

RADIAL CLEARANCE "Z" = 4.03

(METRIC SIZES ALSO AVAILABLE)

PUMP FLANGE		PUMP END DATA						
		XAK	XAJ2	XBF2	XAJ4	XBF4	XBD	MOUNT NO.
USA4F17	4 Bolt	1.782			2.84	5/16-18	5.25	S056 - - 4F
SAE AA	2 Bolt	2.001	3.25	3/8-16			5.25	S056 - - 2AA
SAE A	2(4) Bolt	3.251	4.19	3/8-16	4.12	3/8-16	5.25	S056 - - 2A
SAE B	2(4) Bolt	4.001	5.75	1/2-13	5.00	1/2-13	7.00	S056 - - 2B
SAE C	2(4) Bolt	5.001	7.12	5/8-11	6.38	1/2-13	8.25	S056 - - 2C

TABLE 20 - NEMA 182TC - 256TC, 254UC/256UC

MOTOR END DATA
AJ 7.25 **BF** 17/32 **BD** 9.00 **AK** 8.501

RADIAL CLEARANCE "Z" = 5.04

(METRIC SIZES ALSO AVAILABLE)

PUMP FLANGE		PUMP END DATA						
		XAK	XAJ2	XBF2	XAJ4	XBF4	XBD	MOUNT NO.
USA4F17	4 Bolt	1.782			2.84	5/16-18	5.25	S182 - - 4F
SAE AA	2 Bolt	2.001	3.25	3/8-16			5.25	S182 - - 2AA
SAE A	2(4) Bolt	3.251	4.19	3/8-16	4.12	3/8-16	5.25	S182 - - 2A
SAE B	2(4) Bolt	4.001	5.75	1/2-13	5.00	1/2-13	7.00	S182 - - 2B
SAE C	2(4) Bolt	5.001	7.12	5/8-11	6.38	1/2-13	8.25	S182 - - 2C
SAE D	2(4) Bolt	6.001	9.00	3/4-10	9.00	3/4-10	10.50	S182 - - 2D

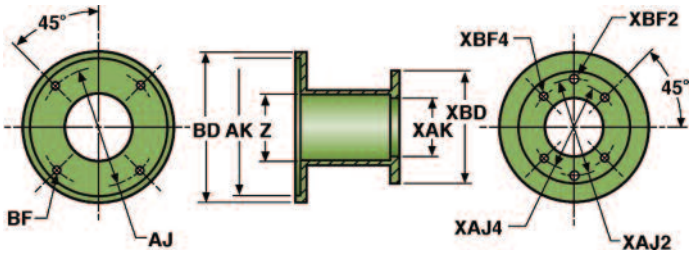

TABLE 21 - NEMA 284TC/TSC - 286TC/TSC, 284UC/286UC

MOTOR END DATA

RADIAL CLEARANCE "Z" = 6.06

(METRIC SIZES ALSO AVAILABLE)

2

AJ	BF	BD	AK
9.00	17/32	11.00	10.501

PUMP FLANGE		PUMP END DATA						
		XAK	XAJ2	XBF2	XAJ4	XBF4	XBD	MOUNT NO.
SAE A	2(4) Bolt	3.251	4.19	3/8-16	4.12	3/8-16	7.00	S284 - - 2A
SAE B	2(4) Bolt	4.001	5.75	1/2-13	5.00	1/2-13	7.00	S284 - - 2B
SAE C	2(4) Bolt	5.001	7.12	5/8-11	6.38	1/2-13	8.25	S284 - - 2C
SAE D	2(4) Bolt	6.001	9.00	3/4-10	9.00	3/4-10	10.50	S284 - - 2D
SAE E	2(4) Bolt	6.501	12.50	1-8	12.50	3/4-10	15.00	S284 - - 2E
SAE F	2(4) Bolt	7.001	13.78	1-8	13.78	1-8	16.00	S284 - - 2F

TABLE 22 - NEMA 324TC/TSC - 405TC/TSC, 324UC/USC - 405UC/USC

MOTOR END DATA

RADIAL CLEARANCE "Z" (See Below)

(METRIC SIZES ALSO AVAILABLE)

AJ	BF	BD	AK
11.00	21/32	14.00	12.501

PUMP FLANGE		PUMP END DATA							
		XAK	XAJ2	XBF2	XAJ4	XBF4	XBD	Z	MOUNT NO.
SAE A	2(4) Bolt	3.251	4.19	3/8-16	4.12	3/8-16	9.25	7.98	S324 - - 2A
SAE B	2(4) Bolt	4.001	5.75	1/2-13	5.00	1/2-13	9.25	7.98	S324 - - 2B
SAE C	2(4) Bolt	5.001	7.12	5/8-11	6.38	1/2-13	9.25	7.98	S324 - - 2C
SAE D	2(4) Bolt	6.001	9.00	3/4-10	9.00	3/4-10	10.50	7.98	S324 - - 2D
SAE E	2(4) Bolt	6.501	12.50	1-8	12.50	3/4-10	15.00	7.98	S324 - - 2E
SAE F	2(4) Bolt	7.001	13.78	1-8	13.78	1-8	16.00	9.00	S324 - - 2F

TABLE 23 - NEMA 444TC/TSC - 449TC/TSC, 444UC/TSC - 445UC/USC

MOTOR END DATA

RADIAL CLEARANCE "Z" = 10.02

(METRIC SIZES ALSO AVAILABLE)

AJ	BF	BD	AK
14.00	21/32	17.00	16.001

PUMP FLANGE		PUMP END DATA						
		XAK	XAJ2	XBF2	XAJ4	XBF4	XBD	MOUNT NO.
SAE A	2(4) Bolt	3.251	4.19	3/8-16	4.12	3/8-16	11.25	S444 - - 2A
SAE B	2(4) Bolt	4.001	5.75	1/2-13	5.00	1/2-13	11.25	S444 - - 2B
SAE C	2(4) Bolt	5.001	7.12	5/8-11	6.38	1/2-13	11.25	S444 - - 2C
SAE D	2(4) Bolt	6.001	9.00	3/4-10	9.00	3/4-10	11.25	S444 - - 2D
SAE E	2(4) Bolt	6.501	12.50	1-8	12.50	3/4-10	15.00	S444 - - 2E
SAE F	2(4) Bolt	7.001	13.78	1-8	13.78	1-8	16.00	S444 - - 2F

magnaloy coupling company 501 Commerce Drive Alpena, MI 49707 989 356-2186
A Division of Douville Johnston Corporation Fax: 989 354-4190 http://www.magnaloy.com

MAGNALOY'S VERTICAL WELDED STEEL MOUNTS utilize an Oversize Motor Flange-Tank Top Mounting design. Tank top openings (TD) and mounting hole dimensions (XT & T) are shown on the following drawing and tables. The Vertical Welded Steel Pump/Motor Mounts are also available for metric size motors and pumps, consult factory for special requirements. To select a welded steel vertical mount follow the selection method detailed on page 21. The length determined will be the minimum length recommended, additional length can be added depending upon coupling selection, consult factory for further assistance.

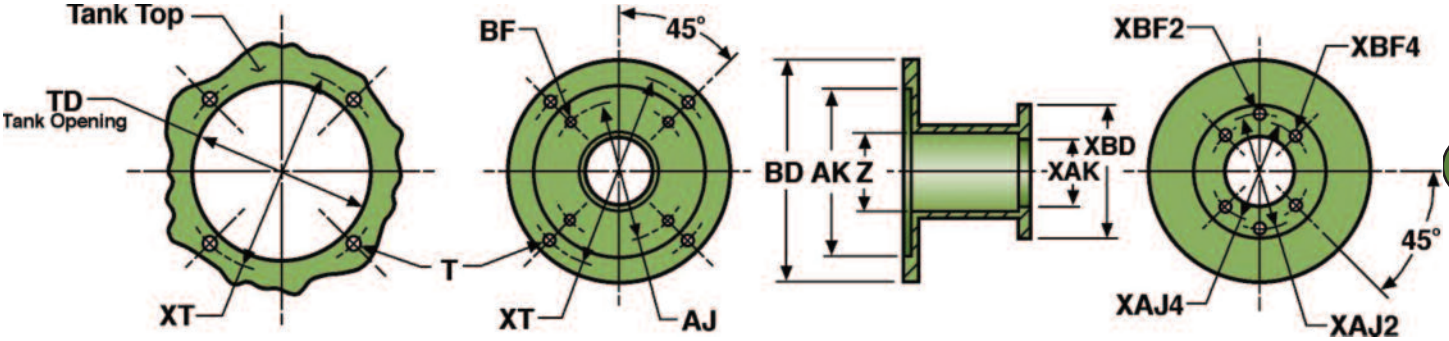

TABLE 24 - NEMA 56C, 143TC/145TC, 182UC/184UC

MOTOR END DATA
AJ 5.88 BF 7/16 AK 4.501

RADIAL CLEARANCE "Z" = 4.03
MOUNTING HOLE DIA. "T" = 17/32

		XAK	XAJ2	XBF2	XAJ4	XBF4	XBD	BD	XT	TD	MOUNT NO.
USA4F17	4 Bolt	1.782			2.84	5/16-18	5.25	11.38	10.25	9.125	S056 - - 4FV
SAE AA	2 Bolt	2.001	3.25	3/8-16			5.25	11.38	10.25	9.125	S056 - - 2AAV
SAE A	2(4) Bolt	3.251	4.19	3/8-16	4.12	3/8-16	5.25	11.38	10.25	9.125	056 - - 2AFV
SAE B	2(4) Bolt	4.001	5.75	1/2-13	5.00	1/2-13	7.00	11.38	10.25	9.125	S056 - - 2BV
SAE C	2(4) Bolt	5.001	7.12	5/8-11	6.38	1/2-13	8.25	11.38	10.25	9.125	S056 - - 2CV
PUMP FLANGE				PUMP END DATA				MOTOR END DATA			

(METRIC SIZES ALSO AVAILABLE)

TABLE 25 - NEMA 182TC - 256TC, 254UC/256UC

MOTOR END DATA
AJ 7.25 BF 17/32 AK 8.501

RADIAL CLEARANCE "Z" = 5.04
MOUNTING HOLE DIA. "T" = 17/32

		XAK	XAJ2	XBF2	XAJ4	XBF4	XBD	BD	XT	TD	MOUNT NO.
USA4F17	4 Bolt	1.782			2.84	5/16-18	6.00	11.38	10.25	9.125	S182 - - 4FV
SAE AA	2 Bolt	2.001	3.25	3/8-16			6.00	11.38	10.25	9.125	S182 - - 2AAV
SAE A	2(4) Bolt	3.251	4.19	3/8-16	4.12	3/8-16	6.00	11.38	10.25	9.125	S182 - - 2AV
SAE B	2(4) Bolt	4.001	5.75	1/2-13	5.00	1/2-13	7.00	11.38	10.25	9.125	S182 - - 2BV
SAE C	2(4) Bolt	5.001	7.12	5/8-11	6.38	1/2-13	8.25	11.38	10.25	9.125	S182 - - 2CV
SAE D	2(4) Bolt	6.001	9.00	3/4-10	9.00	3/4-10	10.50	12.62	11.50	11.00	S182 - - 2DV
PUMP FLANGE				PUMP END DATA				MOTOR END DATA			

(METRIC SIZES ALSO AVAILABLE)

TABLE 26 - NEMA 284TC/TSC - 286TC/TSC, 284UC/286UC

MOTOR END DATA
AJ BF AK
9.00 17/32 10.501

RADIAL CLEARANCE "Z" = 6.06
MOUNTING HOLE DIA. "T" = 17/32

		XAK	XAJ2	XBF2	XAJ4	XBF4	XBD	BD	XT	TD	MOUNT NO.
SAE A	2(4) Bolt	3.251	4.19	3/8-16	4.12	3/8-16	7.00	13.50	12.25	10.75	S284 - - 2AV
SAE B	2(4) Bolt	4.001	5.75	1/2-13	5.00	1/2-13	7.00	13.50	12.25	10.75	S284 - - 2BV
SAE C	2(4) Bolt	5.001	7.12	5/8-11	6.38	1/2-13	8.25	13.50	12.25	10.75	S284 - - 2CV
SAE D	2(4) Bolt	6.001	9.00	3/4-10	9.00	3/4-10	10.50	13.50	12.25	10.75	S284 - - 2DV
SAE E	2(4) Bolt	6.501	12.50	1-8	12.50	3/4-10	15.00	18.00	16.50	15.25	S284 - - 2EV
SAE F	2(4) Bolt	7.001	13.78	1-8	13.78	1-8	16.00	19.50	18.00	16.50	S284 - - 2FV

PUMP FLANGE PUMP END DATA MOTOR END DATA

(METRIC SIZES ALSO AVAILABLE)

2

TABLE 27 - NEMA 324TC/TSC - 405TC/TSC, 324UC/USC - 405UC/USC

MOTOR END DATA
AJ BF AK
11.00 21/32 12.501

RADIAL CLEARANCE "Z" (See Below)
MOUNTING HOLE DIA. "T" = 21/32

		XAK	XAJ2	XBF2	XAJ4	XBF4	XBD	Z	BD	XT	TD	MOUNT NO.
SAE A	2(4) Bolt	3.251	4.19	3/8-16	4.12	3/8-16	9.25	7.98	18.00	16.50	15.25	S324 - - 2AV
SAE B	2(4) Bolt	4.001	5.75	1/2-13	5.00	1/2-13	9.25	7.98	18.00	16.50	15.25	S324 - - 2BV
SAE C	2(4) Bolt	5.001	7.12	5/8-11	6.38	1/2-13	9.25	7.98	18.00	16.50	15.25	S324 - - 2CV
SAE D	2(4) Bolt	6.001	9.00	3/4-10	9.00	3/4-10	10.50	7.98	18.00	16.50	15.25	S324 - - 2DV
SAE E	2(4) Bolt	6.501	12.50	1-8	12.50	3/4-10	15.00	7.98	18.00	16.50	15.25	S324 - - 2EV
SAE F	2(4) Bolt	7.001	13.78	1-8	13.78	1-8	16.00	16.00	19.50	18.00	16.50	S324 - - 2FV

PUMP FLANGE PUMP END DATA MOTOR END DATA

(METRIC SIZES ALSO AVAILABLE)

TABLE 28 - NEMA 444TC/TSC - 449TC/TSC, 444UC/USC - 449UC/USC

MOTOR END DATA
AJ BF AK
14.00 21/32 16.001

RADIAL CLEARANCE "Z" = 10.02
MOUNTING HOLE DIA. "T" = 21/32

		XAK	XAJ2	XBF2	XAJ4	XBF4	XBD	BD	XT	TD	MOUNT NO.
SAE A	2(4) Bolt	3.251	4.19	3/8-16	4.12	3/8-16	11.25	19.50	18.00	16.50	S444 - - 2AV
SAE B	2(4) Bolt	4.001	5.75	1/2-13	5.00	1/2-13	11.25	19.50	18.00	16.50	S444 - - 2BV
SAE C	2(4) Bolt	5.001	7.12	5/8-11	6.38	1/2-13	11.25	19.50	18.00	16.50	S444 - - 2CV
SAE D	2(4) Bolt	6.001	9.00	3/4-10	9.00	3/4-10	11.25	19.50	18.00	16.50	S444 - - 2DV
SAE E	2(4) Bolt	6.501	12.50	1-8	12.50	3/4-10	15.00	19.50	18.00	16.50	S444 - - 2EV
SAE F	2(4) Bolt	7.001	13.78	1-8	13.78	1-8	16.00	19.50	18.00	16.50	S444 - - 2FV

PUMP FLANGE PUMP END DATA MOTOR END DATA

(METRIC SIZES ALSO AVAILABLE)

magnaloy coupling company 501 Commerce Drive Alpena, MI 49707 989 356-2186
A Division of Douville Johnston Corporation Fax: 989 354-4190 http://www.magnaloy.com

MAGNALOY'S WELDED STEEL ENGINE MOUNTS are available for all engine pilot size configurations in addition to the 4 basic sizes listed. Metric pump flanges are also available, consult factor for special requirements. To select a welded steel pump/engine mount, follow the selection method detailed on page 24. The length determined will be the minimum length recommended, additional length can be added depending upon coupling selection, consult factory for further assistance.

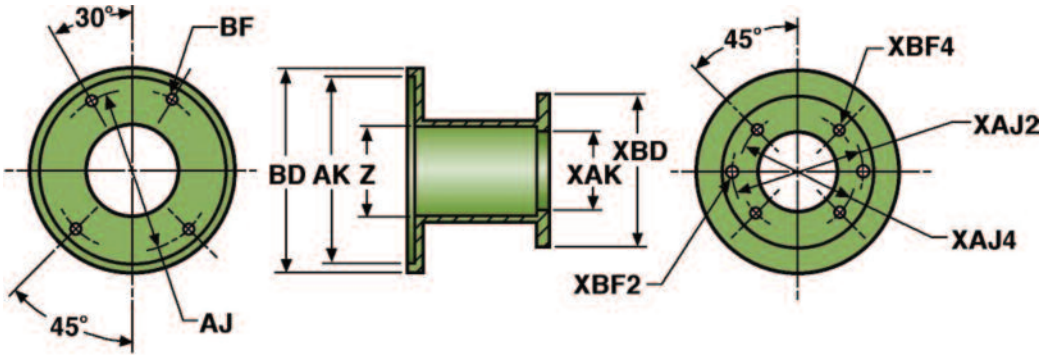

TABLE 29 - E575 Pilot Gasoline and Diesel Engines

ENGINE END DATA — AJ 6.00, BF 13/32, AK 7.50, 5.752

RADIAL CLEARANCE "Z" = 4.03

(METRIC SIZES ALSO AVAILABLE)

PUMP FLANGE		PUMP END DATA						
		XAK	XAJ2	XBF2	XAJ4	XBF4	XBD	MOUNT NO.
USA4F17	4 Bolt	1.782			2.84	5/16-18	5.25	SE575 - - 4F
SAE AA	2 Bolt	2.001	3.25	3/8-16			5.25	SE575 - - 2AA
SAE A	2(4) Bolt	3.251	4.19	3/8-16	4.12	3/8-16	5.25	SE575 - - 2A
SAE B	2(4) Bolt	4.001	5.75	1/2-13	5.00	1/2-13	7.00	SE575 - - 2B

TABLE 30 - E644 Pilot Gasoline and Diesel Engines

ENGINE END DATA — AJ 7.75, BF 15/32, AK 9.00, 6.440

RADIAL CLEARANCE "Z" = 5.04

(METRIC SIZES ALSO AVAILABLE)

PUMP FLANGE		PUMP END DATA						
		XAK	XAJ2	XBF2	XAJ4	XBF4	XBD	MOUNT NO.
USA4F17	4 Bolt	1.782			2.84	5/16-18	5.25	SE644 - - 4F
SAE AA	2 Bolt	2.001	3.25	3/8-16			5.25	SE644 - - 2AA
SAE A	2(4) Bolt	3.251	4.19	3/8-16	4.12	3/8-16	5.25	SE644 - - 2A
SAE B	2(4) Bolt	4.001	5.75	1/2-13	5.00	1/2-13	7.00	SE644 - - 2B
SAE C	2(4) Bolt	5.001	7.12	5/8-11	6.38	1/2-13	8.25	SE644 - - 2C
SAE D	2(4) Bolt	6.001	9.00	3/4-10	9.00	3/4-10	10.50	SE644 - - 2D

TABLE 31 - E700 Pilot Gasoline and Diesel Engines

ENGINE END DATA
AJ BF AK
7.75 15/32 9.00 7.002

RADIAL CLEARANCE "Z" = 5.04

(METRIC SIZES ALSO AVAILABLE)

PUMP FLANGE		XAK	XAJ2	XBF2	XAJ4	XBF4	XBD	MOUNT NO.
USA4F17	4 Bolt	1.782			2.84	5/16-18	5.25	SE700 - - 4F
SAE AA	2 Bolt	2.001	3.25	3/8-16			5.25	SE700 - - 2AA
SAE A	2(4) Bolt	3.251	4.19	3/8-16	4.12	3/8-16	5.25	SE700 - - 2A
SAE B	2(4) Bolt	4.001	5.75	1/2-13	5.00	1/2-13	7.00	SE700 - - 2B
SAE C	2(4) Bolt	5.001	7.12	5/8-11	6.38	1/2-13	8.25	SE700 - - 2C
SAE D	2(4) Bolt	6.001	9.00	3/4-10	9.00	3/4-10	10.50	SE700 - - 2D
		PUMP END DATA						

2

TABLE 32 - E787 Pilot Gasoline and Diesel Engines

ENGINE END DATA
AJ BF AK
9.25 21/32 11.00 7.877

RADIAL CLEARANCE "Z" = 6.06

(METRIC SIZES ALSO AVAILABLE)

PUMP FLANGE		XAK	XAJ2	XBF2	XAJ4	XBF4	XBD	MOUNT NO.
USA4F17	4 Bolt	1.782			2.84	5/16-18	5.25	SE787 - - 4F
SAE AA	2 Bolt	2.001	3.25	3/8-16			5.25	SE787 - - 2AA
SAE A	2(4) Bolt	3.251	4.19	3/8-16	4.12	3/8-16	5.25	SE787 - - 2A
SAE B	2(4) Bolt	4.001	5.75	1/2-13	5.00	1/2-13	7.00	SE787 - - 2B
SAE C	2(4) Bolt	5.001	7.12	5/8-11	6.38	1/2-13	8.25	SE787 - - 2C
SAE D	2(4) Bolt	6.001	9.00	3/4-10	9.00	3/4-10	10.50	SE787 - - 2D
		PUMP END DATA						

Magnaloy's Product Configurator Program: ***This unique computer program allows the user to input the pump manufacturer and model number and motor size. The correct Magnaloy Coupling and Horizontal or Vertical Pump/Motor Mount size is determined. If Magnaloy does not offer an Aluminum mount to fit the input parameters, a steel mount is selected showing the minimum and maximum face-to-face length required. Motor selection includes NEMA motor frames, IEC motor frames and IC Engines. IC Engines are selected by manufacturer and model number.***

Consult your Magnaloy Distributor for Magnaloy's Product CD ROM which includes the Magnaloy Pump/Motor Mount Selection Program.....for easy, fast and accurate computerized pump mount selection.

magnaloy coupling company 501 Commerce Drive Alpena, MI 49707 989 356-2186
A Division of Douville Johnston Corporation Fax: 989 354-4190 http://www.magnaloy.com

Pump/Motor Mount Dampening Ring

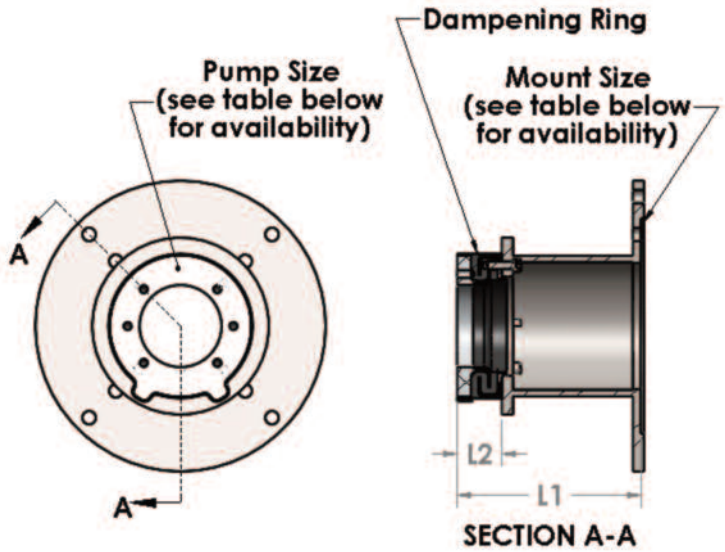

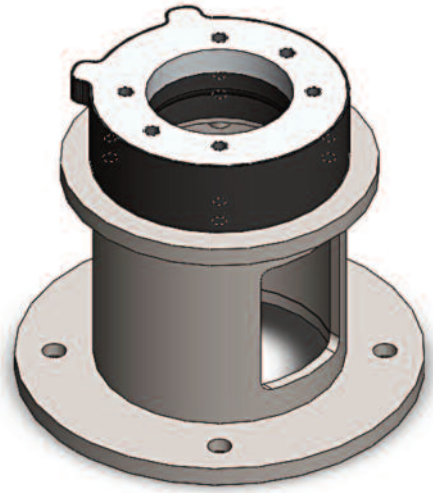

Magnaloy offers a line of Vibration/Noise Dampening Rings for use in conjunction with their Pump/Motor Mounts to provide reduced noise and vibration in these assemblies. These Pump/Motor Mount assemblies can be used in combination with Magnaloy's Motor Dampening Bars (page 157) to provide additional noise dampening capabilities. All Magnaloy Dampening Rings offer the featrues listed below and are available in both Welded Steel Pump/Motor Mounts and limited Aluminum Pump/Motor Mounts.

Selection Method: See page 18 (Horizontal application) or page 21 (Vertical application) for determining the length of the pump/motor mount required based upon the motor and pump being used. OR use Magnaloy's Product Configuration Program and select "Steel Mount" to obtain the length range for the pump/motor mount. From this length, subtract the length of the required Dampening Ring (dimension L2) shown in the table below. This will provide the length of the Pump/Motor Mount required for the application. Check this length against the available lengths of Aluminum Pump/Motor Mounts for the Motor size required. If no Aluminum Pump/Motor Mount is available in the length range specified, a Welded Steel Pump/Motor Mount will be necessary. Consult factory for assistance.

Features

- Design offers failsafe interlocking metal components with no direct contact and vulcanized for superior noise dampening.
- Design offers high load bearing capabilities for use with multiple pump arrangements.
- Excellent noise dampening characteristics.
- Excellent hydraulic fluid compatability.

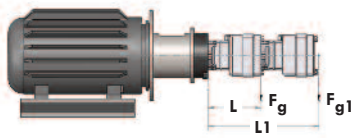

Horizontal Mounting

The Pump Weight (F_g), cannot exceed the Maximum Load (F_{max}) from table below.

NOTE: *For Horizontal Mounting with C of G locations greater than L (shown in table below), use conversion formula.*

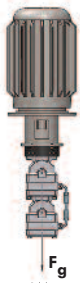

Vertical Mounting

Ring Size / Characteristic	D150	D190	D230	D260	D330
Distance from face of Ring to C of G for load L	4 inch	4 inch	4 inch	8 inch	8 inch
Maximum Load F_{max}	2,900 lb	8,000 lb	13,300 lb	10,200 lb	18,200 lb

Conversion Formula

$F_{g1} = F_{max} * L / L1$

Note: *if $L1 < L$, $F_{g1} = F_{max}$*

Dampening Ring Availability

Damping Ring Size	Motor Mount Avail Sizes	Motor End Data	Pump Flange Avail Sizes	Pump End Data	Dampening Ring Length (L2)	Mount Face-to-Face Length (L1)
D150	NEMA 056 NEMA 182	See Reference Section Page 172 for NEMA Motor Frame Dimensional data	SAE 4F17 thru SAE A 2/4 Bolt ISO 32 A2 thru ISO 80 A2/B4	See Reference Section Page 171 for Pump Flange Dimensional data	1.772	Determined by Motor and Pump Dimensional Data, consult factory
D190	NEMA 182 NEMA 284	See Reference Section Page 172 for NEMA Motor Frame Dimensional data	SAE 4F17 thru SAE B 2/4 Bolt ISO 32 A2 thru ISO 112 A2/B4	See Reference Section Page 171 for Pump Flange Dimensional data	1.772	Determined by Motor and Pump Dimensional Data, consult factory
D230	NEMA 284	See Reference Section Page 172 for NEMA Motor Frame Dimensional data	SAE B 2/4 Bolt thru SAE C 2/4 Bolt ISO 100 A2/B4 thru ISO 140 A2/B4	See Reference Section Page 171 for Pump Flange Dimensional data	2.283	Determined by Motor and Pump Dimensional Data, consult factory
D260	NEMA 324 NEMA 444	See Reference Section Page 172 for NEMA Motor Frame Dimensional data	SAE B 2/4 Bolt thru SAE C 2/4 Bolt ISO 100 A2/B4 thru ISO 16A0 A2/B4	See Reference Section Page 171 for Pump Flange Dimensional data	2.283	Determined by Motor and Pump Dimensional Data, consult factory
D330	NEMA 324 NEMA 444	See Reference Section Page 172 for NEMA Motor Frame Dimensional data	SAE C 2/4 Bolt thru SAE D 2/4 Bolt ISO 125 A2/B4 thru ISO 200 A2/B4	See Reference Section Page 171 for Pump Flange Dimensional data	3.268	Determined by Motor and Pump Dimensional Data, consult factory

magnaloy coupling company 501 Commerce Drive Alpena, MI 49707 989 356-2186
A Division of Douville Johnston Corporation Fax: 989 354-4190 http://www.magnaloy.com

SECTION 3

MAGNALOY HYDRAULIC BAR MANIFOLDS AND MANIFOLDING ACCESSORIES

NOTE: *Due to Magnaloy's policy of continuous improvement, specificaitons are subject to change without notice. Check with the factory or our Web Site at www.magnaloy.com for the latest information.*

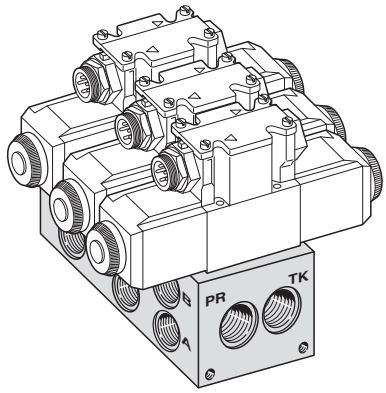

General Information:

Standard Bar Manifold - includes specified NFPA valve pattern mounting on top of the manifold, A & B ports per specified thread type on the face of the manifold and pressure and tank ports per the specified thread type on each end of the manifold. Mounting provisions are included and defined on following manifold pages.

Options:

Z - **No Options** - indicates no options are provided (standard manifold)

B - **Bottom PR -TK ports** - additional pressure and tank ports per specified thread type located on the bottom of the manifold.

C - **Relief Valve Common Cavity** configurations added to the back surface of the manifold.

G - **Gauge Port** - addition of gauge port per specified thread type (see port size chart) to the face of the manifold to allow monitoring of the pressure "PR" passage.

G4 - With Retro Design Manifolds Only - **#4 SAE Gauge Port** (with "S" thread code). Standard Gauge Port is #6 SAE (with "S" thread code) or 1/4 NPT (with "P" thread code).

G6 - With Standard Design Manifolds - **#6 SAE Gauge Port** (with "S" thread code). Standard Gauge Port is #4 SAE (with "S" thread code) or 1/4 NPT (with "P" thread code).

S - **Relief Valve Sun Cavity** configuration added to the back surface of the manifold.

H - **Hard Metric Thread** - When British or Metric Thread type is specified, the valve and manifold mounting holes are also Metric Threaded.

M - **Soft Metric Thread** - indicates mixed metric threading. When NPT or SAE thread type is specified, valve mounting holes are metric threaded. No code "M" indicates the valve and manifold mounting holes are English threaded.

I - **Isolation Plug** - addition of an isolation plug(s) in the pressure or tank passage to provide signal isolation for valve operation. The location of the isolation plug is specified by indicating which station it is installed between. With the manifold positioned with the A & B ports facing forward, the valve mounting surfaces up and numbering from left to right, location A is between stations 1 & 2, location B is between stations 2 & 3, location C is between stations 3 & 4, etc. Isolation plugs can be installed in the pressure or tank passages or both. (See Note 1, next page and Reference Section, page 173)

L - **L Port** - addition of a drain port to the valve pattern on top of the manifold with a connecting port outlet on the back surface on the manifold. One port per station.

O - **Oversized A & B Ports** - (D05 High Flow and D05H-Alt.B only) - provides A & B ports machined oversized from the standard port size for additional flow capacity - see port size charts.

P - **Pilot Pressure** (D08 only) - addition of a pilot pressure signal port to the back surface of the manifold. One port per station.

magnaloy coupling company *501 Commerce Drive Alpena, MI 49707* ***989 356-2186***
A Division of Douville Johnston Corporation *Fax: 989 354-4190* *http://www.magnaloy.com*

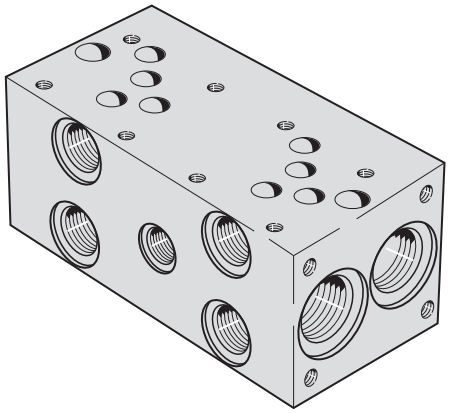

Standard Bar Manifolds

38	NFPA D03 Directional Valves in Parallel Circuits
40	NFPA D03 Directional Valves in Series Circuits
42	NFPA D03 Retro Design Directional Valves in Parallel Circuits
44	NFPA D03 High Flow Retro Design Directional Valves in Parallel Circuits
46	NFPA D05 Directional Valves in Parallel Circuits
48	NFPA D05 Directional Valves in Series Circuits
50	NFPA D05 High Flow Directional Valves in Parallel Circuits
52	NFPA D05E Alt.A Directional Valves in Parallel Circuits
54	NFPA D05H Alt.B Directional Valves in Parallel Circuits
56	NFPA D08 Directional Valves in Parallel Circuits
58	NFPA D08 High Flow Retro Design Directional Valves in Parallel Circuits
60	NFPA D08 Directional Valve in Series Circuits

Bar Manifold Hardware

173	Isolation Plugs for factory and field installation
174	Mounting Bracket Kits

MAGNALOY BAR MANIFOLD PART NUMBER BREAKDOWN

***B M - A H P 0 3 P 2 - 0 2 - 1 / C**

Product Code
- BM-Inline Bar Manifold
- BMR-Retro Inline Bar Manifold

Material Code
- A - Aluminum
- S - Ductile/Steel

Circuit Code
- HP - High Flow Parallel Circuit
- SP - Standard Flow Parallel Circuit
- SS - Series Circuit

NFPA Pattern Code
- 03 - D03
- 05 - D05
- 5E - D05E Alt. A
- 5H - D05H Alt. B
- 08 - D08

Thread Code
- P - NPTF Pipe
- S - SAE O'Ring
- B - BSPP British Parallel
- T - BSPT British Taper
- M - Metric ISO 6149

(See Port Size Chart for Standard Port Sizes)

Options
- Z - No Option
- B - Bottom PR-TK Ports
- C - Relief Valve Cavity C-10-2, C-16-2
- G - Gauge Port #4 SAE or 1/4" NPTF
- G4 - Gauge Port #4 SAE
- G6 - Gauge Port #6 SAE
- L - L Port
- O - Oversized A and B Ports
- P - Pilot Pressures (Individual Per Station)
- S - Relief Valve Cavity Sun T-10A,T-3A, T-16A
- H - Hard Metric Threading [Note 2]
- M - Soft Metric Threading [Note 3]
- I - Isolation Plug [Note 1] - List as last option designated

Note: For more than two combined options, Consult Factory.

Design Series

Number of Valve Stations
- 01 - 1 stations
- 02 - 2 stations
- etc.

Valve Spacing Code
- D03 2 = 2.00" (2.13" on D03 Retro Design)
- 4 = 4.00"
- D05 3 = 3.25"
- 5 = 5.00"
- D08 5 = 5.25"
- 7 = 7.00"

(For Special Spacing requirements, please consult factory.)

* ***Not all codes and options are available in combinations, see following Manifold Pages for specific Magnaloy standard configurations and options.***

Notes:

1 - Isolation Plug Location is specified by using the following codes after the "I" option designation:

Port	Location*	Examples:
P - Pressure Port	A - Between Stations 1 & 2	Option Code for Pressure Isolation between stations 3 & 4 = IPC
T - Tank Port	B - Between Stations 2 & 3	Option Code for Tank Isolation between stations 1 & 2 = ITA
	C - Between Stations 3 & 4	Option Code for Pressure Isolation between stations 1 & 2 and
	D - Between Stations 4 & 5 (etc.)	Tank Isolation between stations 2 & 3 = IPATB

*Location is determined with A &B ports facing forward, valves up and numbering from left to right

2 - Hard Metric Threading - Used with British and Metric Thread Type to indicate Valve Mounting is also Metric Threaded

3 - Soft Metric Threading - Used with NPT or SAE Thread Type to indicate Valve Mounting is Metric Threaded
(No Code Designation Indicates Valve Mounting is English Threaded)

D03 Standard Flow Bar Manifold - Parallel

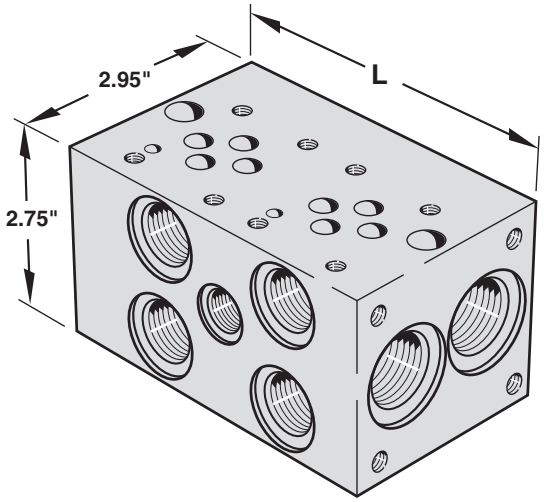

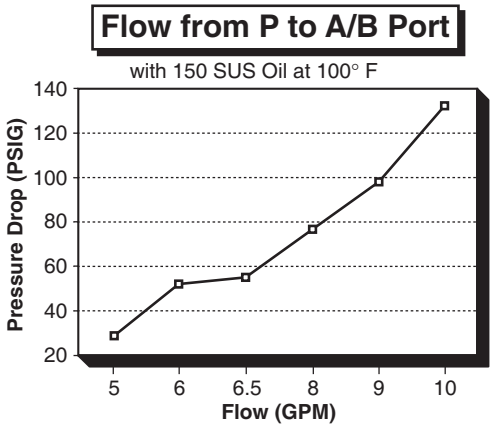

Features & Advantages

3

* The efficient design provides excellent flow rates with minimal pressure drop.
* Standard end mount and through holes make mounting easy and flexible. Also, (when requested) mounting bracket kit BK-A03 (no charge) or flange mount kit FK-03 (additional cost) is available with the manifold as alternative mounting styles.
* Available with SAE, NPTF, BSPP, BSPT or Metric Threads to cover a wide range of applications.
* Options include relied valve cavity, bottom PR & TK ports, and gauge port to fit specific circuit requirements.

Dimensions

No of Stations	L	E	F
1	2.75" *	2.00"	-
2	4.75"	4.00"	-
3	6.75"	6.00"	-
4	8.75"	8.00"	-
5	10.75"	10.00"	-
6	12.75"	12.00"	-
7	14.75"	14.00"	8.00"
8	16.75"	16.00"	8.00"
9	18.75"	18.00"	8.00"
10	20.75"	20.00"	10.00"
11	22.75"	22.00"	8.00" & 16.00"
12	24.75"	24.00"	8.00" & 16.00"
13	26.75"	26.00"	8.00" & 16.00"
14	28.75"	28.00"	10.00" & 20.00"

Shaded area - Please consult factory for delivery.

* For Single Station with B, C, S, G, or G6 Options, "L" = 3.75"

MAGNALOY D03 PARALLEL BAR MANIFOLD PART NUMBER BREAKDOWN

B M - A S P 0 3 P 2 - 0 2 - 1 / C

Product Code
BM-Inline Bar Manifold

Material Code
A - Aluminum
S - Ductile/Steel

Circuit Code
SP - Standard Flow Parallel Circuit

NFPA Pattern Code
03 - D03

Thread Code
P - NPTF Pipe
S - SAE O'Ring
B - BSPP British Parallel
T - BSPT British Taper
M - Metric - ISO 6149
(See Port Size Chart for Standard Port Sizes)

Options
Z - No Option
B - Bottom PR-TK Ports
C - Relief Valve Cavity C-10-2
G - Gauge Port #4 SAE or 1/4" NPTF
G6 - Gauge Port #6 SAE
S - Relief Valve Cavity Sun T-10A
H - Hard Metric Threading (See Note 2, page 34)
M - Soft Metric Threading (See Note 3, page 34)
I - Isolation Plug [1] - List as last option designated (See Note 1, page 34)
Note: For more than two combined options, please consult factory.

Design Series

Number of Valve Stations
01 - 1 stations
02 - 2 stations
etc.

Valve Spacing Code
2 - 2.00"
4 - 4.00"
(For Special Spacing requirements, please consult factory.)

magnaloy coupling company *501 Commerce Drive Alpena, MI 49707* ***989 356-2186***
A Division of Douville Johnston Corporation *Fax: 989 354-4190* *http://www.magnaloy.com*

D03 Standard Flow Bar Manifold - Parallel

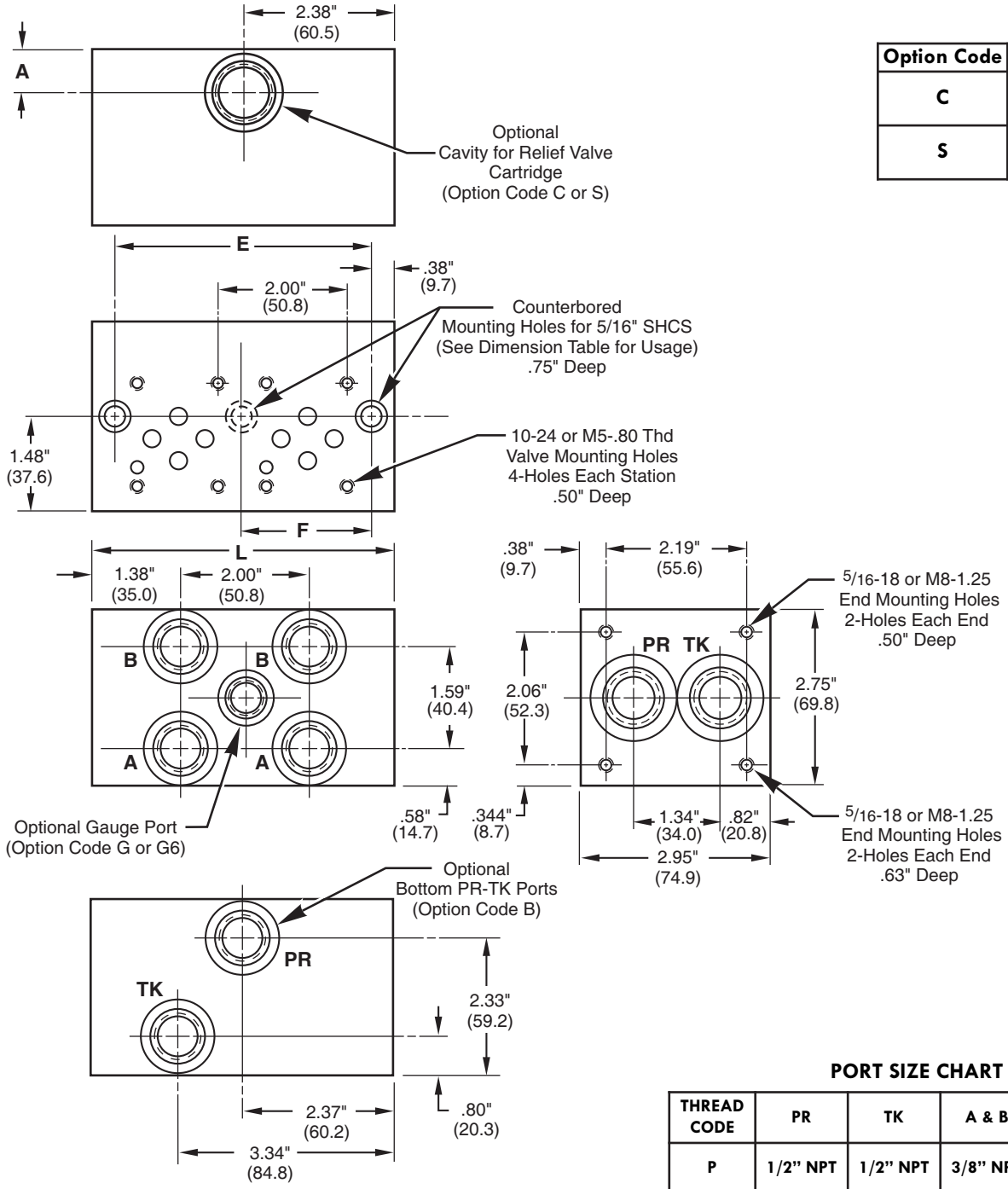

Option Code	A
C	.69" (17.5)
S	.81" (20.6)

NOTE: For End Mounting Bracket Kit (BK-A03) and Mounting Flange Kit (FK-A03) dimensions, see Reference Section, page 174.

PORT SIZE CHART

THREAD CODE	PR	TK	A & B	OPTIONAL GAUGE PORTS
P	1/2" NPT	1/2" NPT	3/8" NPT	1/4" NPT
S	#10 SAE	#10 SAE	#8 SAE	#4 SAE G6 - #6 SAE
B	1/2" BSPP	1/2" BSPP	3/8" BSPP	-
T	1/2" BSPT	1/2" BSPT	3/8" BSPT	-
M	M22	M22	M18	-

magnaloy coupling company 501 Commerce Drive Alpena, MI 49707 989 356-2186
A Division of Douville Johnston Corporation Fax: 989 354-4190 http://www.magnaloy.com

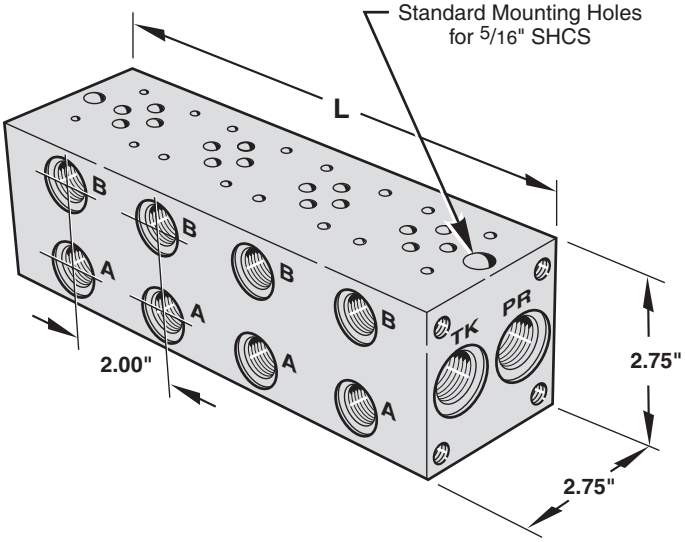

FEATURES AND ADVANTAGES

* Available with SAE, NPT, BSPP, BSPT or Metric Threads to cover a wide range of applications.
* Adequate clearance for 5/8" tube fittings.
* Mounting bolt spacing allows standardized mounting pads.
* Tank and pressure lines may be connected at either end.

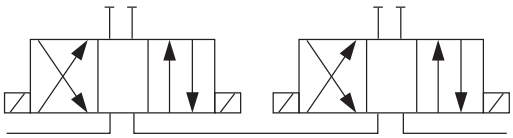

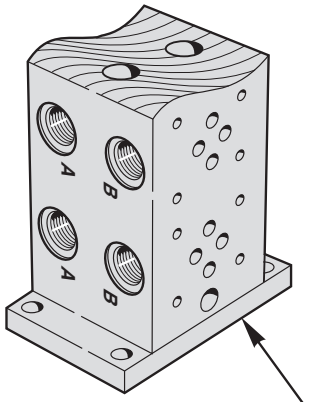

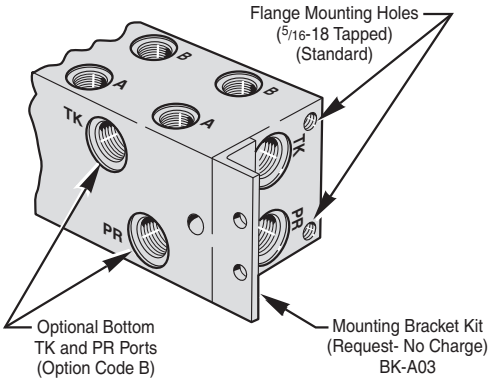

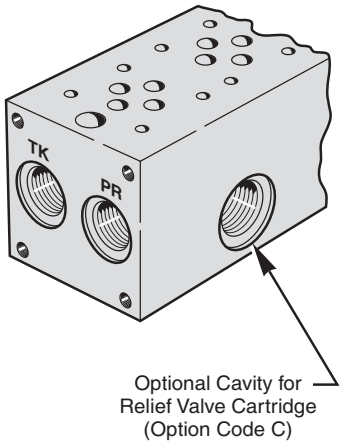

MAGNALOY D03 SERIES BAR MANIFOLD PART NUMBER BREAKDOWN

B M - A S S 0 3 S 2 - 0 1 - 0 / B

Product Code
BM-Inline Bar Manifold

Material Code
A - Aluminum
S - Steel

Circuit Code
SS - Series Circuit

NFPA Pattern Code
03 - D03

Thread Code
P - NPTF Pipe
S - SAE O'Ring
B - BSPP British Parallel
T - BSPT British Taper
M - Metric ISO 6149
(See Port Size Chart for Standard Port Sizes)

Valve Spacing Code
2 - 2.00"

Number of Valve Stations
02 - 2 stations
03 - 3 stations
etc.

Design Series

Options
Z - No Option
B - Bottom PR-TK Ports
C - Relief Valve Cavity C-10-2
G - Gauge Port #4 SAE or 1/4" NPTF
G6 - Gauge Port #6 SAE
H - Hard Metric Threading (See Note 2, page 34)
M - Soft Metric Threading (See Note 3, page 34)

magnaloy coupling company 501 Commerce Drive Alpena, MI 49707 989 356-2186
A Division of Douville Johnston Corporation Fax: 989 354-4190 http://www.magnaloy.com

D03 Bar Manifold - Series

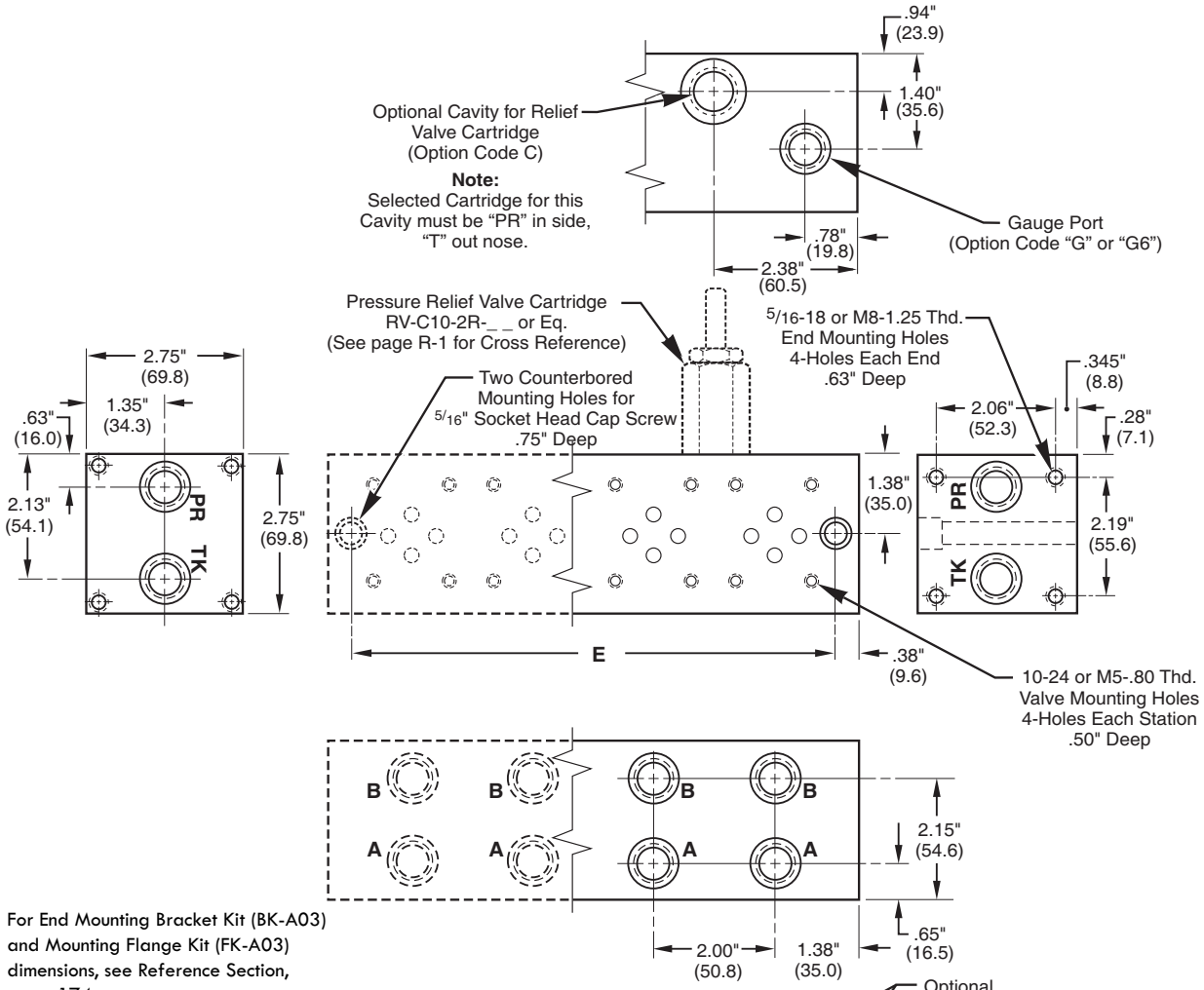

NOTE: For End Mounting Bracket Kit (BK-A03) and Mounting Flange Kit (FK-A03) dimensions, see Reference Section, page 174.

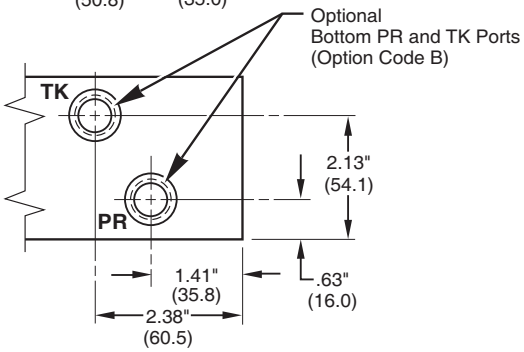

NO. OF STATIONS	2	3	4
LENGTH (L)	4.75"	6.75"	8.75"
E	4.00"	6.00"	8.00"

Additional stations available, consult factory.

PORT SIZE CHART

THREAD CODE	PR	TK	A & B	OPTIONAL GAUGE PORTS
P	1/2" NPT	1/2" NPT	3/8" NPT	1/4" NPT
S	#8 SAE	#8 SAE	#8 SAE	#4 SAE G6 - #6 SAE
B	1/2" BSPP	1/2" BSPP	3/8" BSPP	-
T	1/2" BSPT	1/2" BSPT	3/8" BSPT	-
M	M18	M18	M18	-

magnaloy coupling company 501 Commerce Drive Alpena, MI 49707 989 356-2186
A Division of Douville Johnston Corporation Fax: 989 354-4190 http://www.magnaloy.com

D03 Retro Design Bar Manifold - Parallel

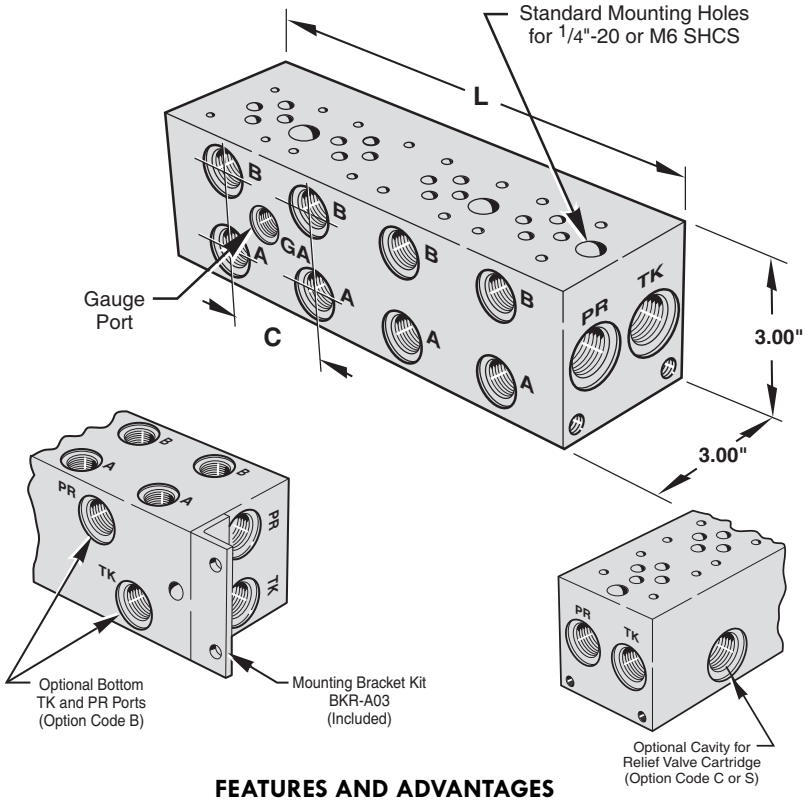

DIMENSIONS (2.13" VALVE SPACING)

NO. OF STATIONS	C	L	E	F
1[1]	--	2.13"	N.A.	--
1[2]	--	3.00"	N.A.	--
2	2.13"	4.25"	2.13"	--
3	2.13"	6.38"	4.25"	--
4	2.13"	8.50"	6.38"	--
5	2.13"	10.63"	8.50"	4.25"
6	2.13"	12.75"	10.63"	4.25"
7	2.13"	14.88"	12.75"	4.25"X 2
8	2.13"	17.00"	14.88"	4.25"X 2
9	2.13"	19.38"	17.00"	6.38"X 2
10	2.13"	21.25"	19.38"	6.38"X 2
11	2.13"	23.38"	21.25"	6.38"X 2
12	2.13"	25.50"	23.38"	6.38"X 3
13	2.13"	27.63"	25.50"	6.38"X 2
14	2.13"	29.75"	27.63"	6.38"X 3

NOTE: 1 - Single Station - No Gauge Port
2 - Single Station with C or S Option, includes Gauge Port

DIMENSIONS (4.00" VALVE SPACING)

NO. OF STATIONS	C	L	E	F
2	4.00"	6.13"	4.00"	
3	4.00"	10.13"	8.00"	
4	4.00"	14.13"	12.00"	8.00"
5	4.00"	18.13"	16.00"	8.00"
6	4.00"	22.13"	20.00"	8.00" X 2
7	4.00"	26.13"	24.00"	8.00" X 2

FEATURES AND ADVANTAGES

* Available with SAE, NPT, BSPP, BSPT or Metric Threads to cover a wide range of applications.
* 2 1/8" or 4" valve center options allow the manifold to be sized for specific D03 valve types.
* Adequate clearance for 5/8" tube fittings.
* Mounting bolt spacing allows standardized mounting pads.
* Tank and pressure lines may be connected at either end.
* Standard Gauge Port is 1/4" NPT with "P" Code and #6 SAE with "S" Code (#4 SEA available with G4 Option.)

MAGNALOY D03 PARALLEL BAR MANIFOLD PART NUMBER BREAKDOWN

B M R - A S P 0 3 S 2 - 0 1 - 1 / B

Product Code
BMR-Inline Bar Manifold
Retro Design

Material Code
A - Aluminum
S - Steel

Circuit Code
SP - Standard Flow Parallel Circuit

NFPA Pattern Code
03 - D03

Thread Code
P - NPTF Pipe
S - SAE O'Ring
B - BSPP British Parallel
T - BSPT British Taper
M - Metric ISO 6149
(See Port Size Chart for Standard Port Sizes)

Valve Spacing Code
2 - 2.13"
4 - 4.00"

Number of Valve Stations
02 - 2 stations
03 - 3 stations
etc.

Design Series

Options
Z - No Option
B - Bottom PR-TK Ports
C - Relief Valve Cavity C-10-2
G4 - Gauge Port #4 SAE
S - Relief Valve Cavity Sun T-10A
M - Soft Metric Threading (See Note 3, page 34)
I - Isolation Plug [1] - Consult Factory
List as last option designated
(See Note 1, page 34)

magnaloy coupling company 501 Commerce Drive Alpena, MI 49707 989 356-2186
A Division of Douville Johnston Corporation Fax: 989 354-4190 http://www.magnaloy.com

D03 Retro Design Bar Manifold - Parallel

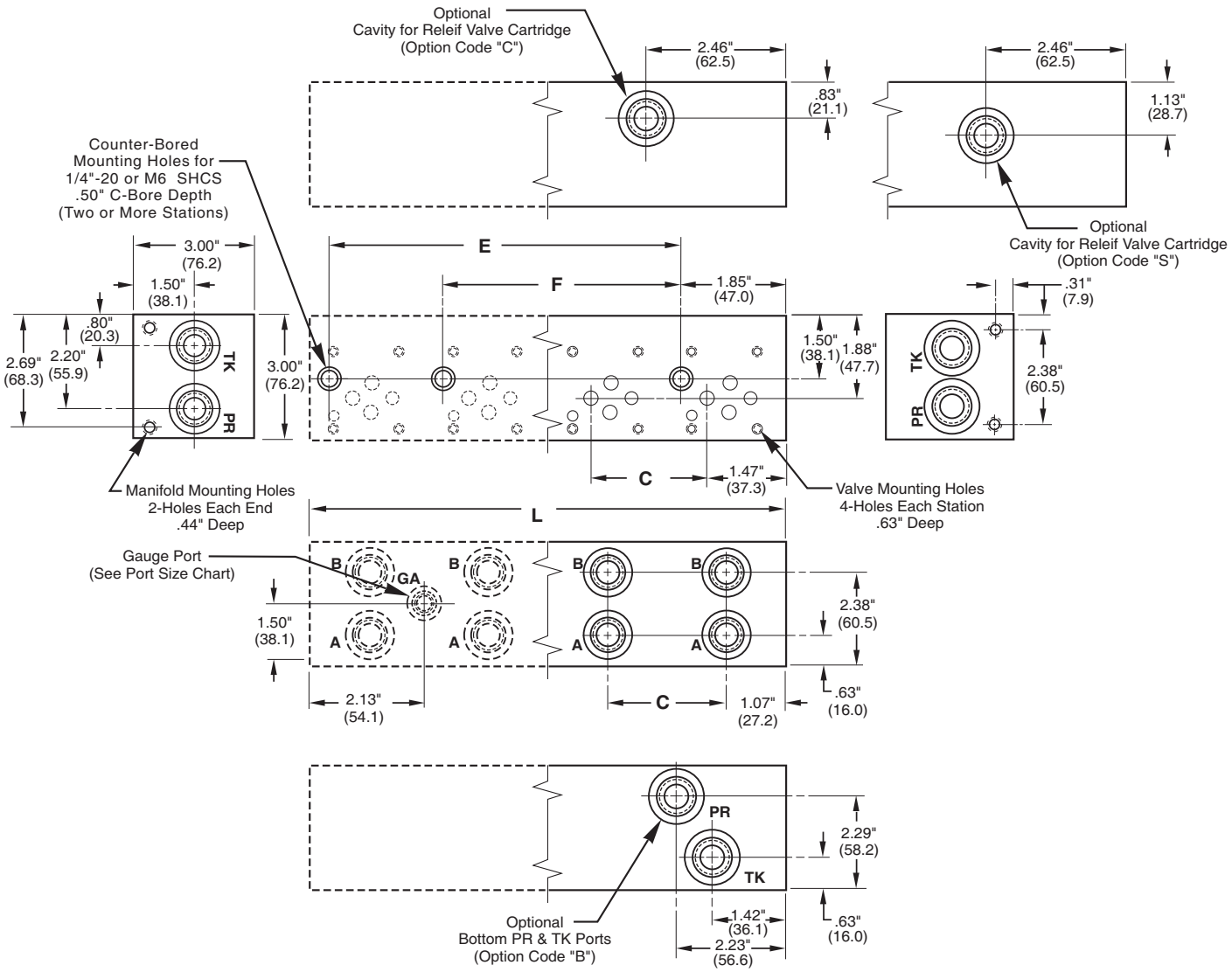

PORT SIZE CHART

THREAD CODE	PR	TK	A & B	OPTIONAL GAUGE PORTS	MOUNTING HOLES	
					VALVE	MANIFOLD
P	1/2" NPT	1/2" NPT	3/8" NPT	1/4" NPT	10 - 24 UNC	5/16 - 18 UNC
S	#10 SAE	#10 SAE	#8 SAE	#4 SAE G6 - #6 SAE	10 - 24 UNC	5/16 - 18 UNC
B	1/2" BSPP	1/2" BSPP	3/8" BSPP	-	M5 - .8	M8 - 1.25
T	1/2" BSPT	1/2" BSPT	3/8" BSPT	-	M5 - .8	M8 - 1.25
M	M22	M22	M18	-	M5 - .8	M8 - 1.25

NOTE: For End Mounting Bracket Kit (BKR-A03) dimensions, see Reference Section, page 174.

magnaloy coupling company *501 Commerce Drive Alpena, MI 49707* ***989 356-2186***
A Division of Douville Johnston Corporation *Fax: 989 354-4190* *http://www.magnaloy.com*

D03 High Flow Retro Design Bar Manifold - Parallel

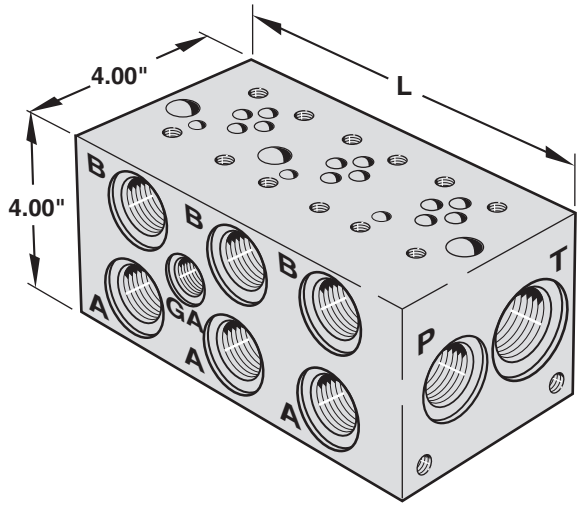

Features & Advantages

3

- + The higher flow design provides maximum flow rates with minimal pressure drops.
- + 2 1/8" or 4" valve center options allow the manifold to be sized for specific D03 valve types.
- + Standard end mount and through holes make mounting easy and flexible. Also, a mounting bracket kit BKR-AH03 is supplied with the manifold as an alternative mounting style.
- + Available with SAE, NPT, BSPP, BSPT or Metric Threads to cover a wide range of applications.
- + Options include relief valve cavity, bottom PR & TK ports, and gauge ports to fit specific circuit requirements.

Dimensions (2.13" Valve Spacing)

No. of Stations	C	L	E	F
1[1]	- -	3.13"	2.38"	-
1[2]	- -	4.00"	3.50"	-
2	2.13"	5.25"	4.50"	-
3	2.13"	7.38"	6.63"	-
4	2.13"	9.50"	8.75"	-
5	2.13"	11.63"	10.88"	6.50"
6	2.13"	13.75"	13.00"	6.50"
7	2.13"	15.88"	15.13"	6.50"
8	2.13"	18.00"	17.25"	8.63"
9	2.13"	20.38"	19.38"	8.63"
10	2.13"	22.25"	21.50"	10.75"
11	2.13"	24.38"	23.63"	8.63" & 17.13"
12	2.13"	26.50"	25.75"	8.63" & 17.13"

Note: 1 - Single Station - No Gauge Port
2 - Single Station with C or S Option, includes Gauge Port.

Dimensions (4.00" Valve Spacing)

No. of Stations	C	L	E	F
2	4.00"	7.13"	6.38"	-
3	4.00"	11.13"	10.38"	-
4	4.00"	15.13"	14.38"	7.18"
5	4.00"	19.13"	18.38"	7.18"
6	4.00"	23.13"	22.38"	11.18"
7	4.00"	27.13"	26.38"	11.18"
8	4.00"	31.13"	30.38"	11.18" & 23.18"

MAGNALOY D03 PARALLEL BAR MANIFOLD PART NUMBER BREAKDOWN

B M R - S H P 0 3 S 2 - 0 2 - 1 / B

Product Code
BMR-Inline Bar Manifold Retro Design

Material Code
A - Aluminum
S - Ductile/Steel

Circuit Code
HP- High Flow Parallel Circuit

NFPA Pattern Code
03 - D03

Thread Code
P - NPTF Pipe
S - SAE O'Ring
B - BSPP British Parallel
T - BSPT British Taper
M - Metric ISO 6149
(See Port Chart for Standard Port Sizes)

Valve Spacing Code
2 - 2.13"
4 - 4.00"

Number of Valve Stations
01 - 1 station
02 - 2 stations
etc.

Design Series

Options
Z - No Option
B - Bottom PR-TK Ports (2 or more Stations)
C - Relief Valve Cavity C-16-2
G4 - Gauge Port #4 SAE
S - Relief Valve Cavity Sun T-3A
M - Soft Metric Threading (See Note 3, page 34)
I - Isolation Plug [1] - List as last option designated
(See Note 1, page 34)

magnaloy coupling company 501 Commerce Drive Alpena, MI 49707 989 356-2186
A Division of Douville Johnston Corporation Fax: 989 354-4190 http://www.magnaloy.com

D03 High Flow Retro Design Bar Manifold - Parallel

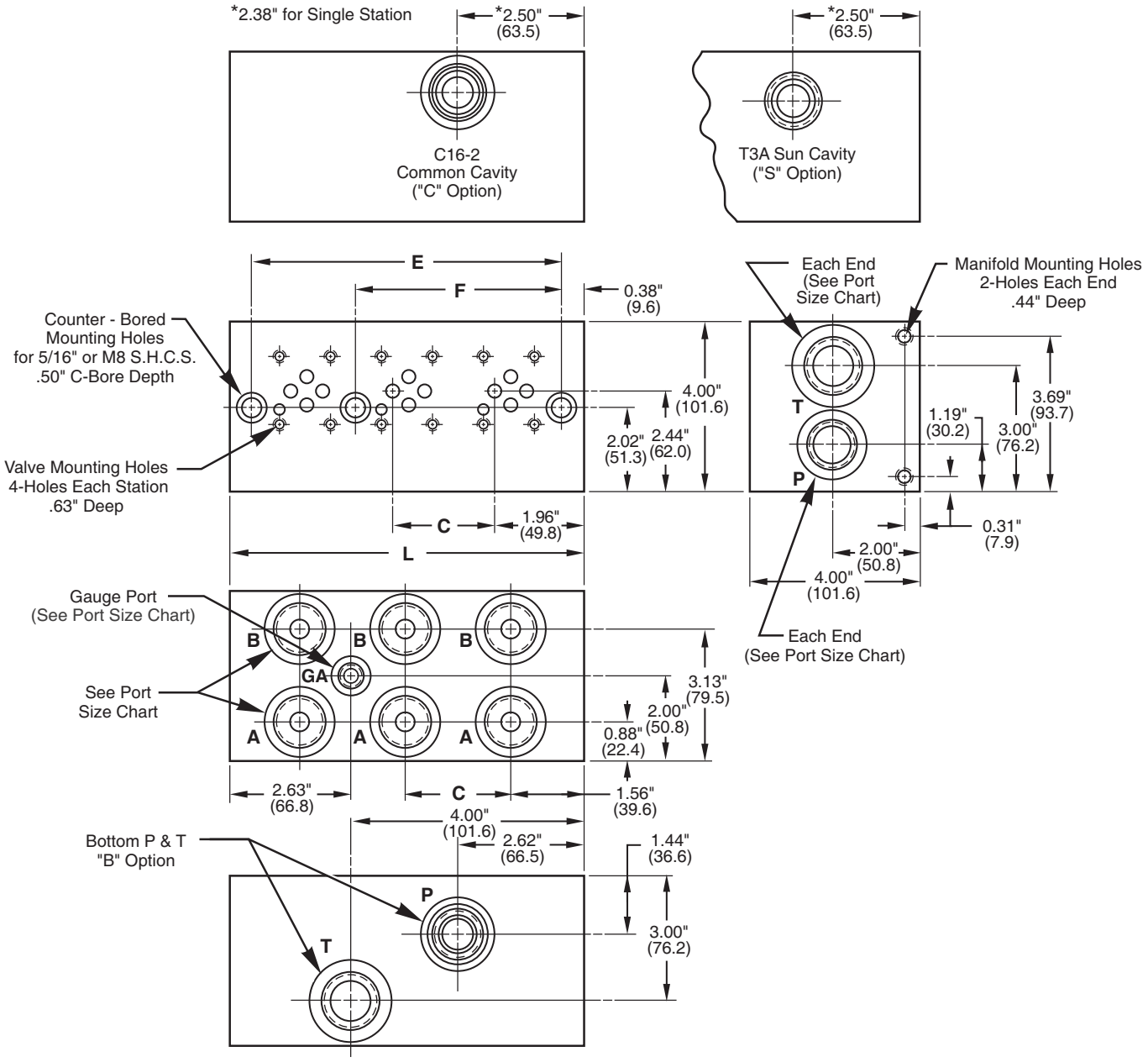

Port Size Chart

Thread Code	PR	TK	A & B	Gauge Ports	Mounting Holes	
					Valve	Manifold
P	3/4" NPT	1" NPT	3/4" NPT	1/4" NPT	10-24 UNC	5/16-18 UNC
S	#12 SAE	#16 SAE	#12 SAE	G4 - #4 SAE #6 SAE	10-24 UNC	5/16-18 UNC
B	3/4" BSPP	1" BSPP	3/4" BSPP	-	M5x.8	M8x1.25
T	3/4" BSPT	1" BSPT	3/4" BSPT	-	M5x.8	M8x1.25
M	M27x2	M33x2	M27x2	-	M5x.8	M8x1.25

Note: For **Mounting Bracket Kit** (BKR-AH03) dimensions, see Reference Section, page 174.

magnaloy coupling company *501 Commerce Drive Alpena, MI 49707* ***989 356-2186***
A Division of Douville Johnston Corporation *Fax: 989 354-4190* *http://www.magnaloy.com*

D05 Standard Bar Manifold - Parallel

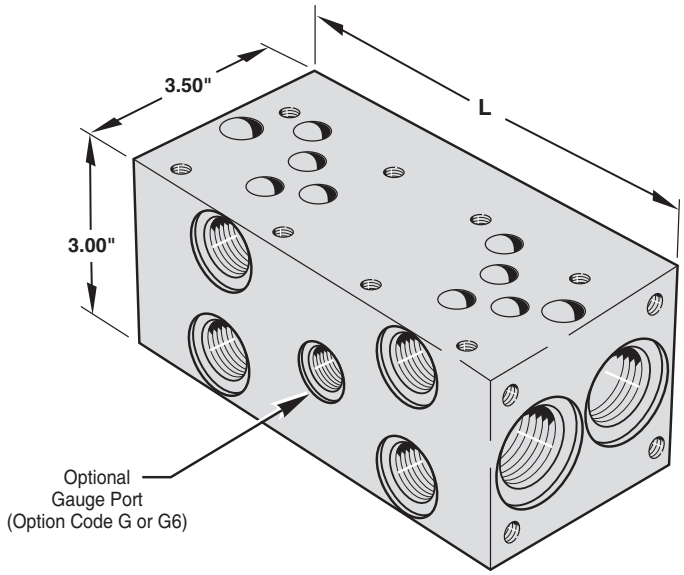

Flow from P to A/B Port

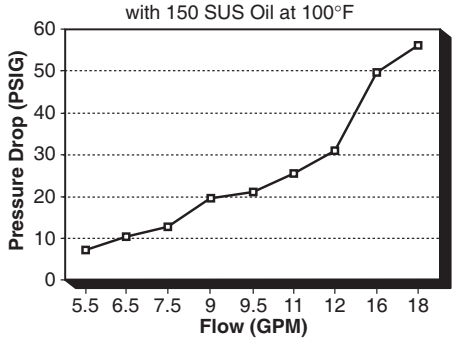

Dimensions (3.25" Valve Spacing)

No. of Stations	C	L	E	F
1	- -	3.25"	2.75"	-
2	3.25"	6.50"	5.50"	-
3	3.25"	9.75"	8.75"	-
4	3.25"	13.50"	12.00"	-
5	3.25"	16.25"	15.25"	8.50"
6	3.25"	19.50"	18.50"	8.50"
7	3.25"	22.75"	21.75"	8.50"
8	3.25"	26.00"	25.00"	8.50"

Note: For Single Station with C, S, G, G6 or B Option, "L" = 4.25"

Dimensions (5.00" Valve Spacing)

No. of Stations	C	L	E	F
2	5.00"	8.25"	7.25"	-
3	5.00"	13.25"	12.25"	-
4	5.00"	18.25"	17.25"	8.50"
5	5.00"	23.25"	22.25"	8.50"
6	5.00"	28.25"	27.25"	13.50"
7	5.00"	33.25"	32.25"	13.50"

3

Features & Advantages

+ The efficient design provides flow rates with minimal pressure drops.
+ 3 1/4" or 5" valve center options allow the manifold to be sized for specific D05 valve types.
+ Standard end mount and through holes make mounting easy and flexible. Also, (when requested) mounting bracket kit BK-A05 (no charge) or flange mounting kit FK-A05 (additional cost) are available as alternative mounting styles.
+ Available with SAE, NPT, BSPP, BSPT or Metric Threads to cover a wide range of applications.
+ Options include relief valve cavity, bottom PR & TK ports, and gauge ports to fit specific circuit requirements.

MAGNALOY D05 PARALLEL BAR MANIFOLD PART NUMBER BREAKDOWN

B M - S S P 0 5 P 3 - 0 1 - 1 / G

Product Code
BM -Inline Bar Manifold

Material Code
A - Aluminum
S - Ductile/Steel

Circuit Code
SP - Standard Flow Parallel Circuit

NFPA Pattern Code
05 - D05

Thread Code
P - NPTF Pipe
S - SAE O'Ring
B - BSPP British Parallel
T - BSPT British Taper
M - Metric - ISO 6149
(See Port Size Chart for Standard Port Sizes.)

Valve Spacing Code
3 - 3.25"
5 - 5.00"

Number of Valve Stations
01 - 1 station
02 - 2 stations
etc.

Design Series

Options
Z - No Option
B - Bottom PR-TK Ports
C - Relief Valve Cavity C-10-2
G - Gauge Port #4 SAE or 1/4" NPTF
G6 - Gauge Port #6 SAE
S - Relief Valve Cavity Sun T-3A
H - Hard Metric Threading (See Note 2, page 34)
M - Soft Metric Threading (See Note 3, page 34)
I - Isolation Plug [1] - List as last option designated (See Note 1, page 34)
Note: For more than two combined options, Please Consult Factory.

magnaloy coupling company 501 Commerce Drive Alpena, MI 49707 989 356-2186
A Division of Douville Johnston Corporation Fax: 989 354-4190 http://www.magnaloy.com

D05 Standard Bar Manifold - Parallel

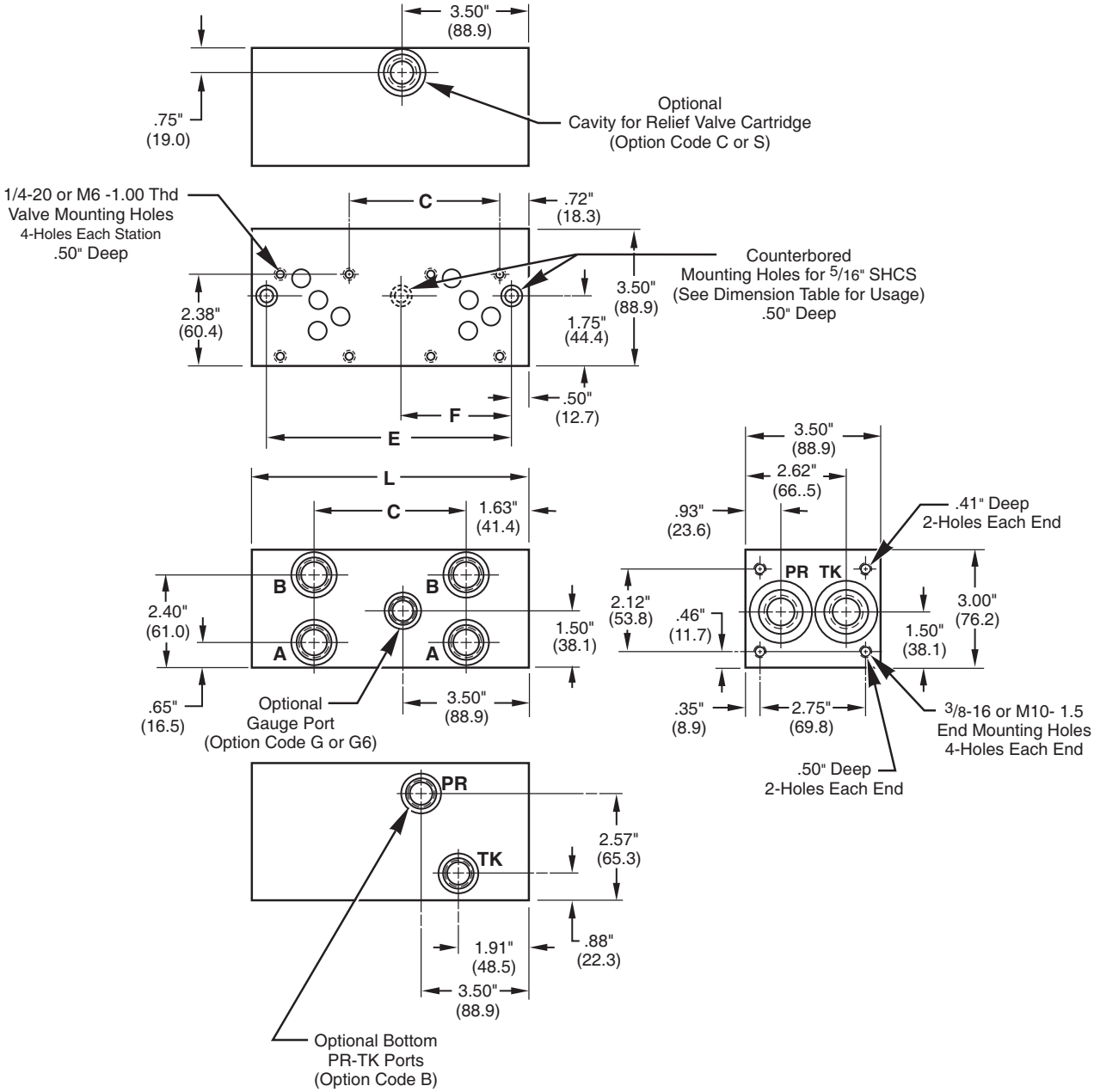

Port Size Chart

Thread Code	PR	TK	A & B	Gauge Ports
P	3/4" NPT	3/4" NPT	1/2" NPT	1/4" NPT
S	#12 SAE	#12 SAE	#8 SAE	G4 - #4 SAE #6 SAE
B	3/4" BSPP	3/4" BSPP	1/2" BSPP	-
T	3/4" BSPT	3/4" BSPT	1/2" BSPT	-
M	M27	M27	M18	-

Note: For **Mounting Bracket Kit** (BK-A05) and Mounting Flange Kit (FK-A05) dimensions, see Reference Section, page 174.

magnaloy coupling company *501 Commerce Drive Alpena, MI 49707* ***989 356-2186***
A Division of Douville Johnston Corporation *Fax: 989 354-4190* *http://www.magnaloy.com*

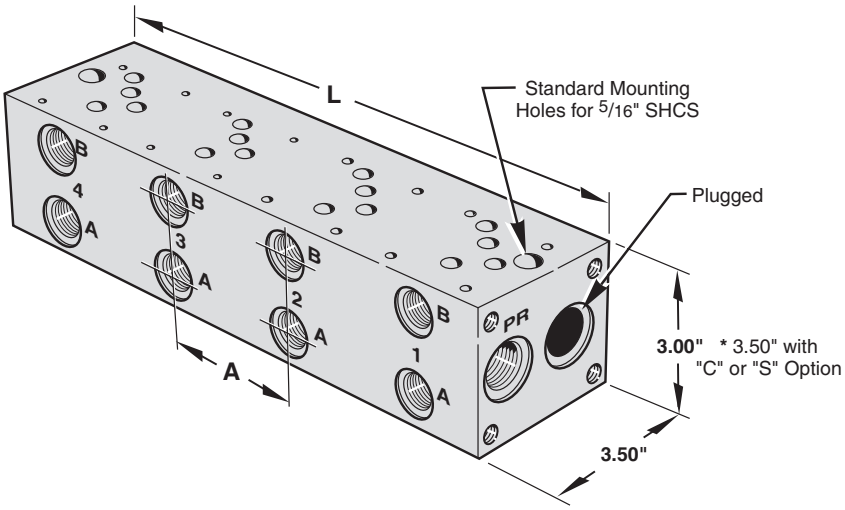

Features & Advantages

- + Available with SAE, NPT, BSPP, BSPT or Metric Threads to cover a wide range of applications.
- + Adequate clearance for 3/4" tube fittings.
- + Mounting bolt spacing allows standardized mounting pads.

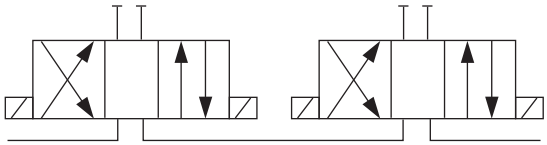

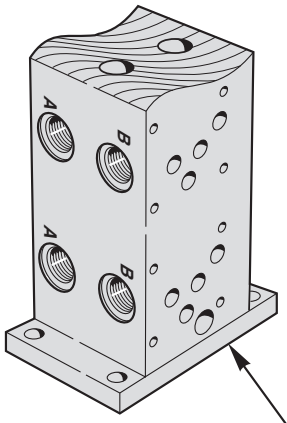

Accessory Mounting Flange
(Non "C" or "S" Only)
(FK-A05)

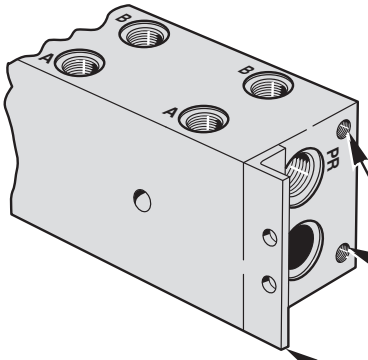

Flange Mounting Holes
(Non "C" or "S" Only)

Mounting Bracket Kit
(Request-No Charge)
(BK-A05)

MAGNALOY D05 SERIES BAR MANIFOLD PART NUMBER BREAKDOWN

B M - A S S 0 5 P 3 - 0 2 - 1 / Z

Product Code
BM - Inline Bar Manifold

Material Code
A - Aluminum
S - Ductile/Steel

Circuit Code
SS - Series Circuit

NFPA Pattern Code
05 - D05

Thread Code
P - NPTF Pipe
S - SAE O'Ring
B - BSPP British Parallel
T - BSPT British Taper
M - Metric ISO 6149
(See Port Size Chart for Standard Port Sizes.)

Valve Spacing Code
3 - 3.25"
5 - 5.00"

Number of Valve Stations
02 - 2 stations
03 - 3 stations
etc.

Design Series

Options
Z - No Option
B - Bottom PR-TK Ports
C - Relief Valve Cavity C-10-2
G - Gauge Port - #4 SAE or 1/4" NPTF
G6 - Gauge Port - #6 SAE
S - Relief Valve Cavity Sun T3A
M - Soft Metric Threading (See Note 3, page 34)

magnaloy coupling company 501 Commerce Drive Alpena, MI 49707 989 356-2186
A Division of Douville Johnston Corporation Fax: 989 354-4190 http://www.magnaloy.com

D05 Bar Manifold - Series

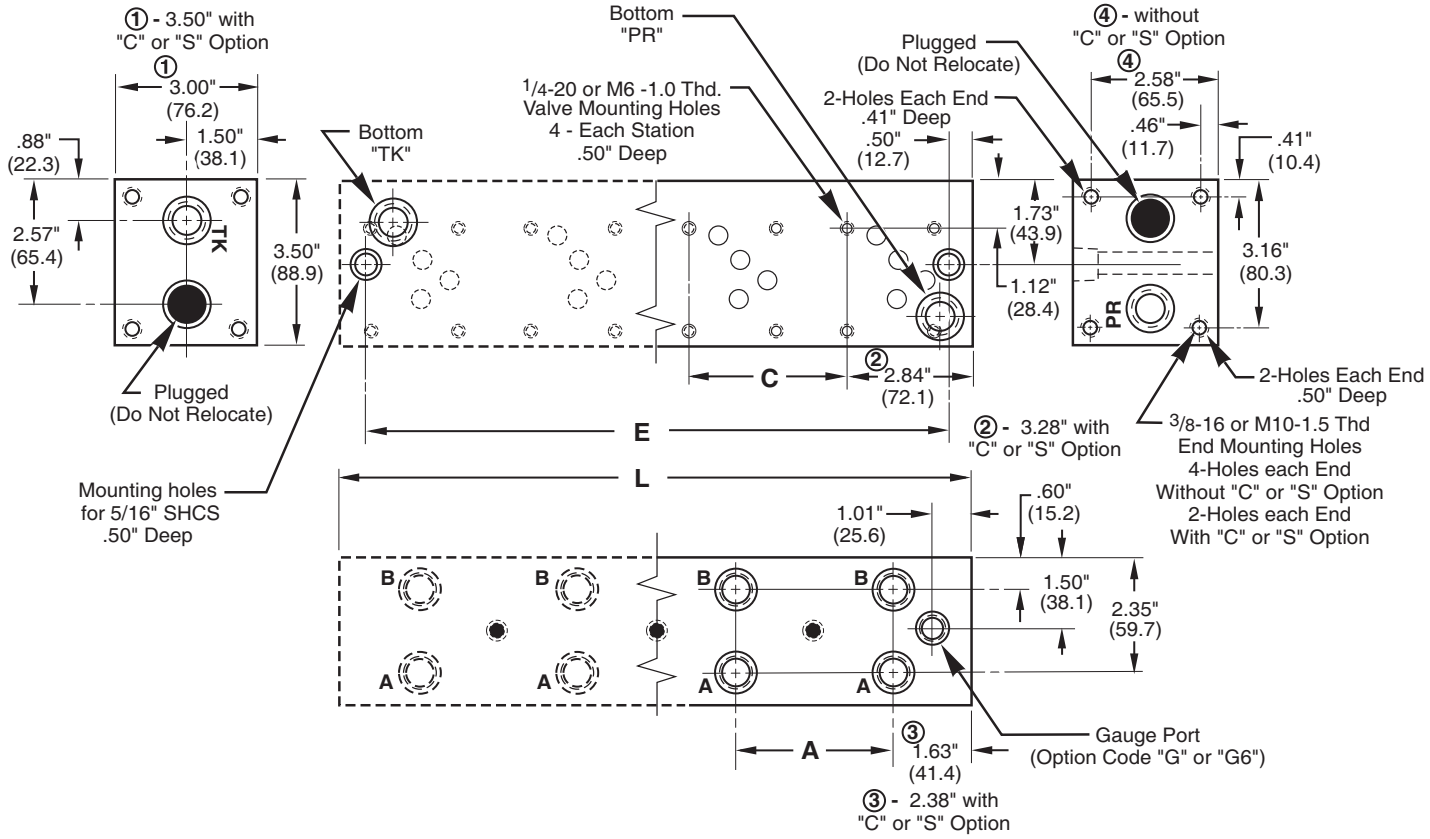

Without "C" or "S" Option

Number of Stations	A/C		E		L	
	Valve Spacing		Valve Spacing		Valve Spacing	
	3.25"	5.00"	3.25"	5.00"	3.25"	5.00"
2	3.25"	5.00"	5.50"	7.25"	6.50"	8.25"
3	3.25"	5.00"	8.75"	12.25"	9.75"	13.25"
4	3.25"	5.00"	12.00"	17.25"	13.00"	18.25"

Additional stations available, consult factory.

With "C" or "S" Option

Number of Stations	A/C		E		L	
	Valve Spacing		Valve Spacing		Valve Spacing	
	3.25"	5.00"	3.25"	5.00"	3.25"	5.00"
2	3.25"	5.00"	6.50"	8.25"	7.50"	9.25"
3	3.25"	5.00"	9.75"	13.25"	10.75"	14.25"
4	3.25"	5.00"	13.00"	18.25"	14.00"	19.25"

Port Size Chart

Thread Code	PR	TK	A & B	Optional Gauge Ports
P	3/4" NPT	3/4" NPT	1/2" NPT	1/4" NPT
S	#12 SAE	#12 SAE	#8 SAE	#4 SAE G6 - #6 SAE
B	3/4" BSPP	3/4" BSPP	1/2" BSPP	-
T	3/4" BSPT	3/4" BSPT	1/2" BSPT	-
M	M27	M27	M18	-

Note: For **Mounting Bracket Kit** (BK-A05) and Mounting Flange Kit (FK-A05) dimensions, see Reference Section, page 174

magnaloy coupling company *501 Commerce Drive Alpena, MI 49707* ***989 356-2186***
A Division of Douville Johnston Corporation *Fax: 989 354-4190* *http://www.magnaloy.com*

D05 High Flow Bar Manifold - Parallel

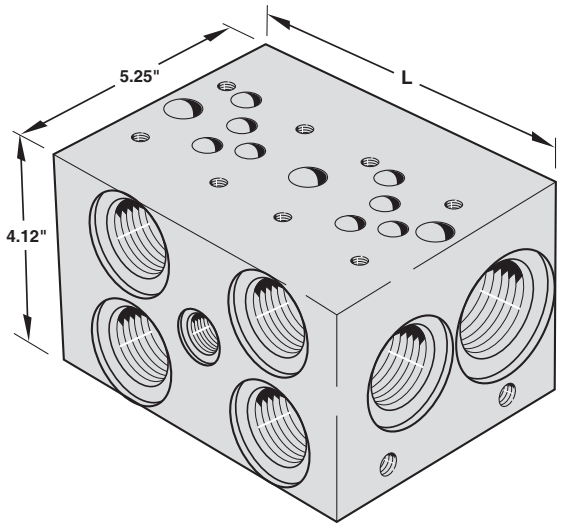

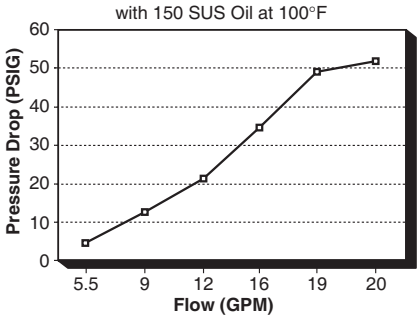

Features & Advantages

- + The high flow design provides flow rates with minimal pressure drops.
- + 3 1/4" or 5" valve center options allow the manifold to be sized for specific D05 valve types.
- + Standard end mount and through holes make mounting easy and flexible. Also, (when requested) mounting bracket kit BK-A05 (no charge) is supplied as alternative end mounting style.
- + Available with SAE, NPT, BSPP, BSPT or Metric Threads to cover a wide range of applications.
- + Options include relief valve cavity, bottom PR & TK ports, and gauge port to fit specific circuit requirements.

3

Dimensions (3.25" Valve Spacing)

No. of Stations	C	L*	E	F
1	- -	3.75"	2.45"	-
2	3.25"	6.50"	5.70"	-
3	3.25"	9.75"	8.95"	-
4	3.25"	13.00"	12.20"	6.50"
5	3.25"	16.25"	15.45"	6.50"
6	3.25"	19.50"	18.70"	6.50" & 13.00"
7	3.25"	22.75"	21.95"	6.50" & 13.00"

* Note: For Single Station with C, S, G, G6 or B Option, "L" = 4.75"

Dimensions (5.00" Valve Spacing)

No. of Stations	C	L	E	F
2	5.00"	8.25"	7.45"	-
3	5.00"	13.25"	12.45"	-
4	5.00"	18.25"	17.45"	10.00"
5	5.00"	23.25"	22.45"	10.00"
6	5.00"	28.25"	27.45"	10.00" & 20.00"
7	5.00"	33.25"	32.45"	10.00" & 20.00"

MAGNALOY D05 PARALLEL BAR MANIFOLD PART NUMBER BREAKDOWN

B M - S H P 0 5 P 3 - 0 1 - 1 / G

Product Code
BM - Inline Bar Manifold

Material Code
A - Aluminum
S - Ductile/Steel

Circuit Code
HP - High Flow Parallel Circuit

NFPA Pattern Code
05 - D05

Thread Code
P - NPTF Pipe
S - SAE O'Ring
B - BSPP British Parallel
T - BSPT British Taper
M - Metric ISO 6149
(See Port Size Chart for Standard Port Sizes)

Options
Z - No Option
B - Bottom PR-TK Ports
C - Relief Valve Cavity C-10-2
G - Gauge Port #4 SAE or 1/4" NPTF
G6 - Gauge Port #6 SAE
L - L Port
O - Oversized A and B Ports
S - Relief Valve Cavity Sun T-3A
H - Hard Metric Threading (See Note 2, page 34)
M - Soft Metric Threading (See Note 3, page 34)
I - Isolation Plug [1] - List as last option designated (See Note 1, page 34)
Note: For more than two combined options, please Consult Factory.

Design Series

Number of Valve Stations
01 - 1 station
02 - 2 stations
etc.

Valve Spacing Code
3 - 3.25"
5 - 5.00"

magnaloy coupling company 501 Commerce Drive Alpena, MI 49707 989 356-2186
A Division of Douville Johnston Corporation Fax: 989 354-4190 http://www.magnaloy.com

D05 High Flow Bar Manifold - Parallel

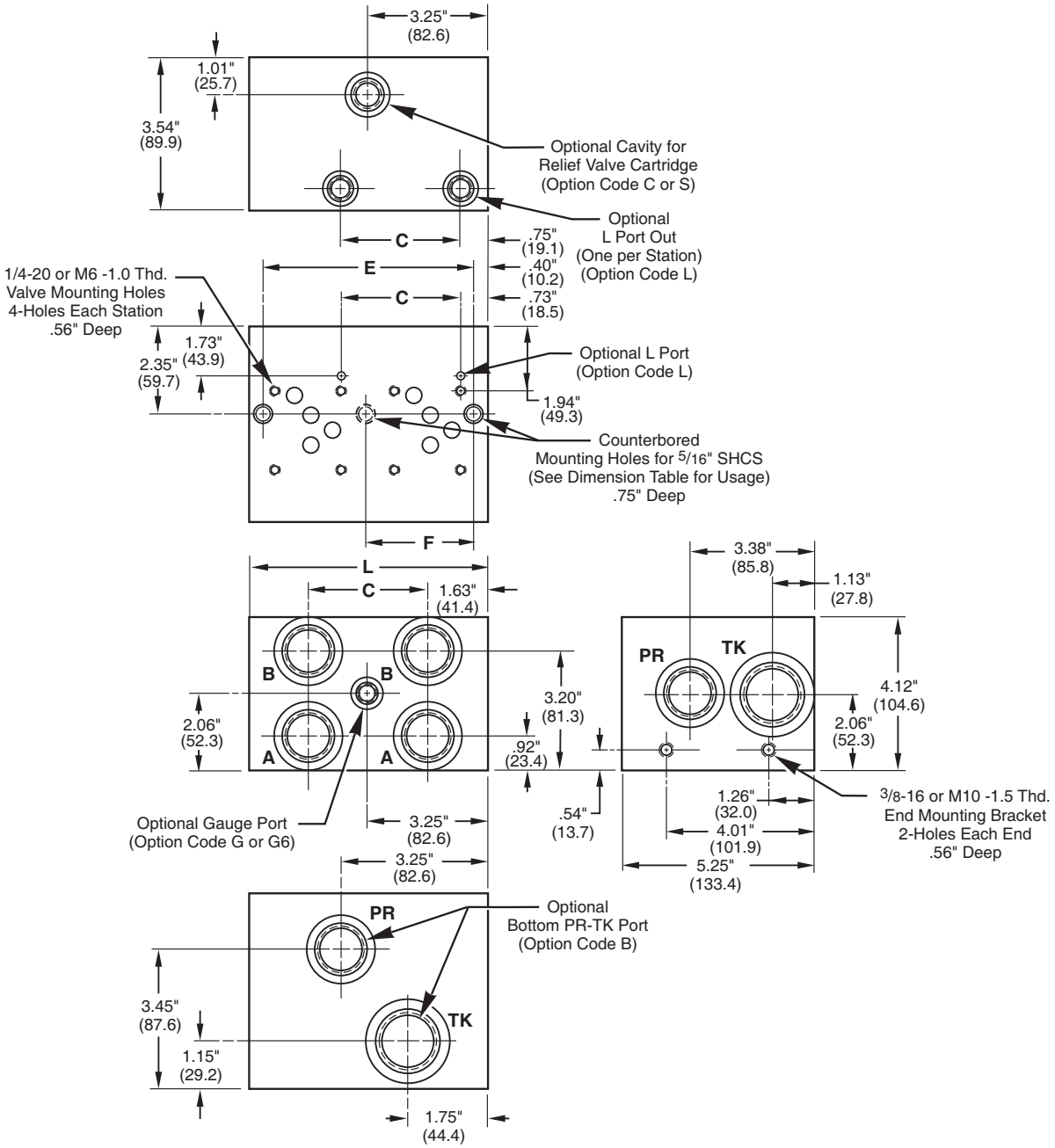

Note: For **Mounting Bracket Kit** (BK-A05) dimensions, see Reference Section, page 174.

Port Size Chart

Thread Code	PR	TK	A & B	A & B (Oversize Option)	L Port	Optional Gauge Ports
P	1" NPT	1 1/4" NPT	3/4" NPT	1" NPT	1/4" NPT	1/4" NPT
S	#16 SAE	#20 SAE	#12 SAE	#16 SAE	#4 SAE	#4 SAE G6 - #6 SAE
B	1" BSPP	1 1/4" BSPP	3/4" BSPP	1" BSPP	1/4" BSPP	-
T	1" BSPT	1 1/4" BSPT	3/4" BSPT	1" BSPT	1/4" BSPT	-
M	M33	M42	M27	M33	M12	-

D05 E Alt. A Bar Manifold - Parallel

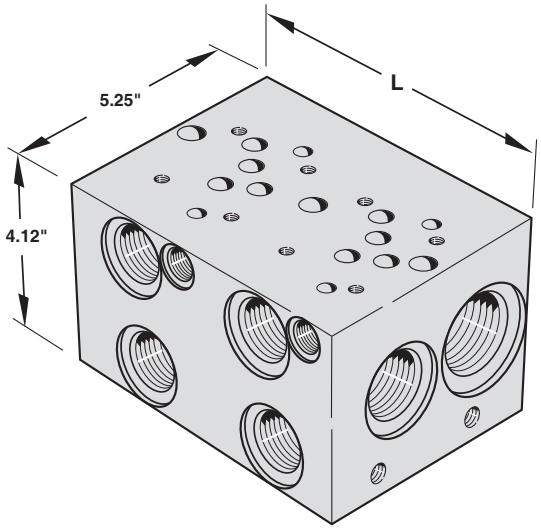

Features & Advantages

3

- + The high flow design provides flow rates with minimal pressure drops.
- + 3 1/4" or 5" valve center options allow the manifold to be sized for specific D05 valve types.
- + Standard end mount and through holes make mounting easy and flexible. Also, (when requested) mounting bracket kit BK-A05 (no charge) is supplied as alternative end mounting style.
- + Available with SAE, NPT, BSPP, BSPT or Metric Threads to cover a wide range of applications.
- + Options include relief valve cavity, bottom PR & TK ports, and gauge port to fit specific circuit requirements.

Dimensions (3.25" Valve Spacing)

No. of Stations	C	L*	E	F
1	- -	3.75"	2.45"	-
2	3.25"	6.50"	5.70"	-
3	3.25"	9.75"	8.95"	-
4	3.25"	13.00"	12.20"	6.50"
5	3.25"	16.25"	15.45"	6.50"
6	3.25"	19.50"	18.70"	6.50" & 13.00"
7	3.25"	22.75"	21.95"	6.50" & 13.00"

* Note: For Single Station with C, S, G, G6 or B Option, "L" = 4.75"

Dimensions (5.00" Valve Spacing)

No. of Stations	C	L	E	F
2	5.00"	8.25"	7.45"	-
3	5.00"	13.25"	12.45"	-
4	5.00"	18.25"	17.45"	10.00"
5	5.00"	23.25"	22.45"	10.00"
6	5.00"	28.25"	27.45"	10.00" & 20.00"
7	5.00"	33.25"	32.45"	10.00" & 20.00"

MAGNALOY D05E ALT. A PARALLEL BAR MANIFOLD PART NUMBER BREAKDOWN

B M - S H P 5 E P 3 - 0 1 - 1 / G

Product Code
BM - Inline Bar Manifold

Material Code
A - Aluminum
S - Ductile/Steel

Circuit Code
HP - High Flow Parallel Circuit

NFPA Pattern Code
5E - D05E Alt. A

Thread Code
P - NPTF Pipe
S - SAE O'Ring
B - BSPP British Parallel
T - BSPT British Taper
M - Metric ISO 6149
(See Port Size Chart for Standard Port Sizes)

Valve Spacing Code
3 - 3.25"
5 - 5.00"

Number of Valve Stations
01 - 1 station
02 - 2 stations
etc.

Design Series

Options
Z - No Option
B - Bottom PR-TK Ports
C - Relief Valve Cavity C-10-2
G - Gauge Port #4 SAE or 1/4 NPTF
G6 - Gauge Port #6 SAE
S - Relief Valve Cavity Sun T-3A
H - Hard Metric Threading (See Note 2, page 34)
M - Soft Metric Threading (See Note 3, page 34)
I - Isolation Plug [1] - List as last option designated (See Note 1, page 34)
Note: For more than two combined options, please Consult Factory.

magnaloy coupling company 501 Commerce Drive Alpena, MI 49707 989 356-2186
A Division of Douville Johnston Corporation Fax: 989 354-4190 http://www.magnaloy.com

D05 E Alt. A Bar Manifold - Parallel

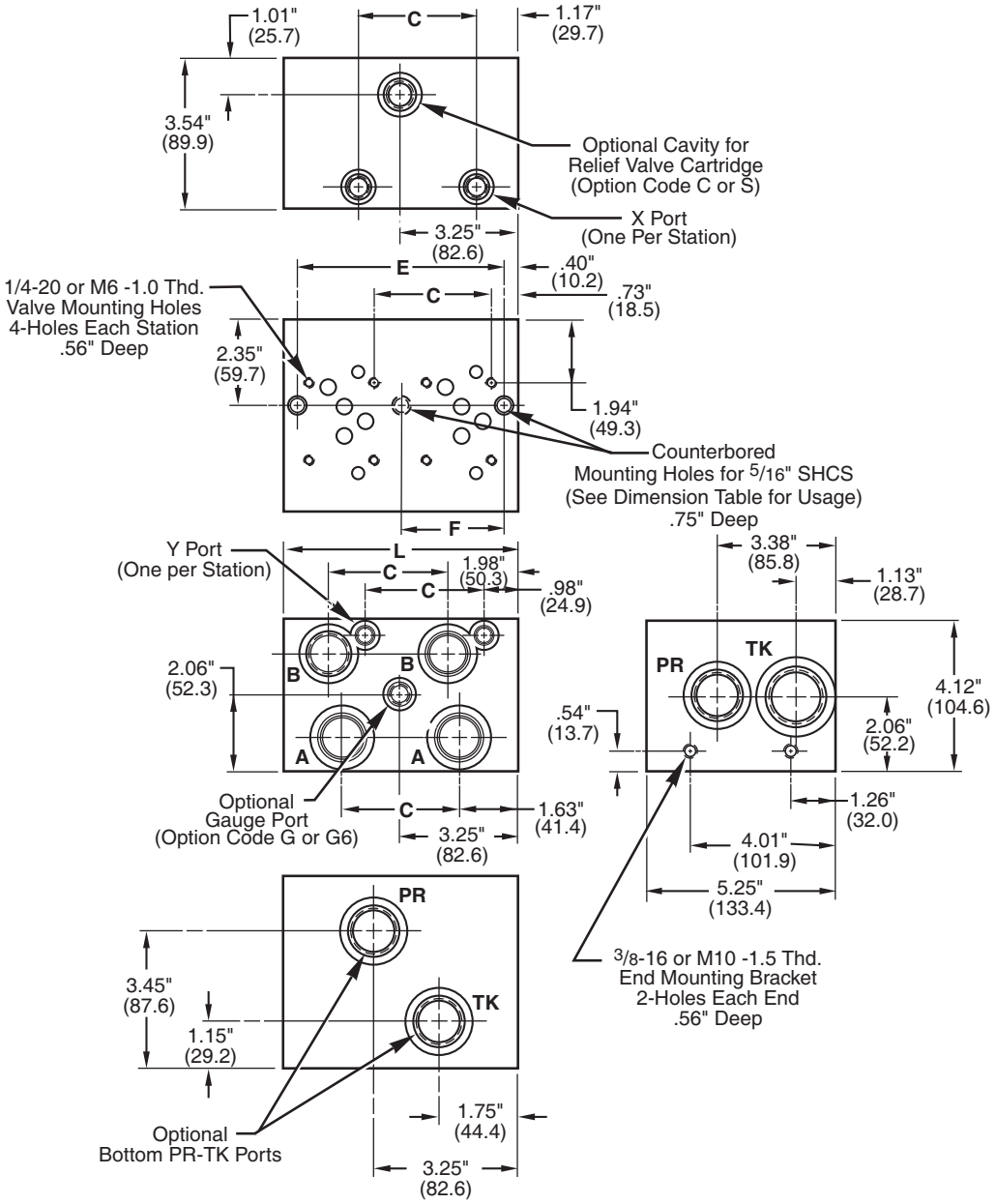

Note: For **Mounting Bracket Kit** (BK-A05) dimensions, see Reference Section, page 174

Port Size Chart

Thread Code	PR	TK	A & B	Optional Gauge Ports	X & Y
P	1" NPT	1 1/4" NPT	3/4" NPT	1/4" NPT	1/4" NPT
S	#16 SAE	#20 SAE	#12 SAE	#4 SAE G6 - #6 SAE	#4 SAE
B	1" BSPP	1 1/4" BSPP	3/4" BSPP	-	1/4" BSPP
T	1" BSPT	1 1/4" BSPT	3/4" BSPT	-	1/4" BSPT
M	M33	M42	M27	-	M12

magnaloy coupling company *501 Commerce Drive Alpena, MI 49707* ***989 356-2186***
A Division of Douville Johnston Corporation *Fax: 989 354-4190* *http://www.magnaloy.com*

D05 H Alt. B Bar Manifold - Parallel

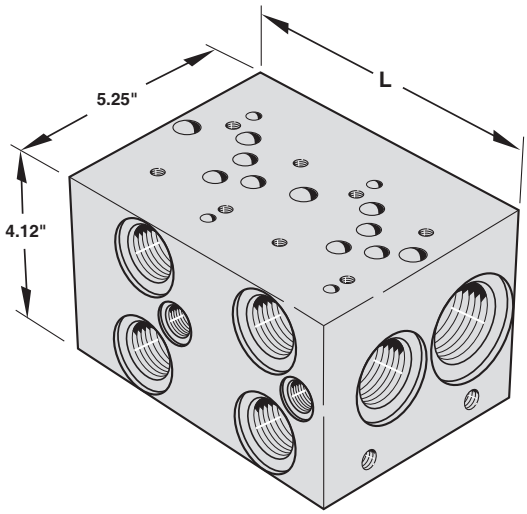

Features & Advantages

3

- + The high flow design provides flow rates with minimal pressure drops.
- + 3 1/4" or 5" valve center options allow the manifold to be sized for specific D05 valve types.
- + Standard end mount and through holes make mounting easy and flexible. Also, (when requested) mounting bracket kit BK-A05 (no charge) is supplied as alternative end mounting style.
- + Available with SAE, NPT, BSPP, BSPT or Metric Threads to cover a wide range of applications.
- + Options include relief valve cavity, bottom PR & TK ports, and gauge port to fit specific circuit requirements.

Dimensions (3.25" Valve Spacing)

No. of Stations	C	L*	E	F
1	- -	3.75"	2.45"	-
2	3.25"	6.50"	5.70"	-
3	3.25"	9.75"	8.95"	-
4	3.25"	13.00"	12.20"	6.50"
5	3.25"	16.25"	15.45"	6.50"
6	3.25"	19.50"	18.70"	6.50" & 13.00"
7	3.25"	22.75"	21.95"	6.50" & 13.00"

* Note: For Single Station with C, S, G, G6 or B Option, "L" = 4.75"

Dimensions (5.00" Valve Spacing)

No. of Stations	C	L	E	F
2	5.00"	8.25"	7.45"	-
3	5.00"	13.25"	12.45"	-
4	5.00"	18.25"	17.45"	10.00"
5	5.00"	23.25"	22.45"	10.00"
6	5.00"	28.25"	27.45"	10.00" & 20.00"
7	5.00"	33.25"	32.45"	10.00" & 20.00"

MAGNALOY D05H ALT. B PARALLEL BAR MANIFOLD PART NUMBER BREAKDOWN

B M - S H P 5 H P 3 - 0 1 - 1 / G

Product Code
BM - Inline Bar Manifold

Material Code
A - Aluminum
S - Ductile/Steel

Circuit Code
HP - High Flow Parallel Circuit

NFPA Pattern Code
5H - D05H Alt. B

Thread Code
P - NPTF Pipe
S - SAE O'Ring
B - BSPP British Parallel
T - BSPT British Taper
M - Metric ISO 6149
(See Port Size Chart for Standard Port Sizes)

Valve Spacing Code
3 - 3.25"
5 - 5.00"

Number of Valve Stations
01 - 1 station
02 - 2 stations
etc.

Design Series

Options
Z - No Option
B - Bottom PR-TK Ports
C - Relief Valve Cavity C-10-2
G - Gauge Port #4 SAE or 1/4 NPTF
G6 - Gauge Port #6 SAE
O - Oversized A and B Ports
S - Relief Valve Cavity Sun T-3A
H - Hard Metric Threading (See Note 2, page 34)
M - Soft Metric Threading (See Note 3, page 34)
I - Isolation Plug [1] - List as last option designated (See Note 1, page 34)
Note: For more than two combined options, Consult Factory.

magnaloy coupling company 501 Commerce Drive Alpena, MI 49707 989 356-2186
A Division of Douville Johnston Corporation Fax: 989 354-4190 http://www.magnaloy.com

D05 H Alt. B Bar Manifold - Parallel

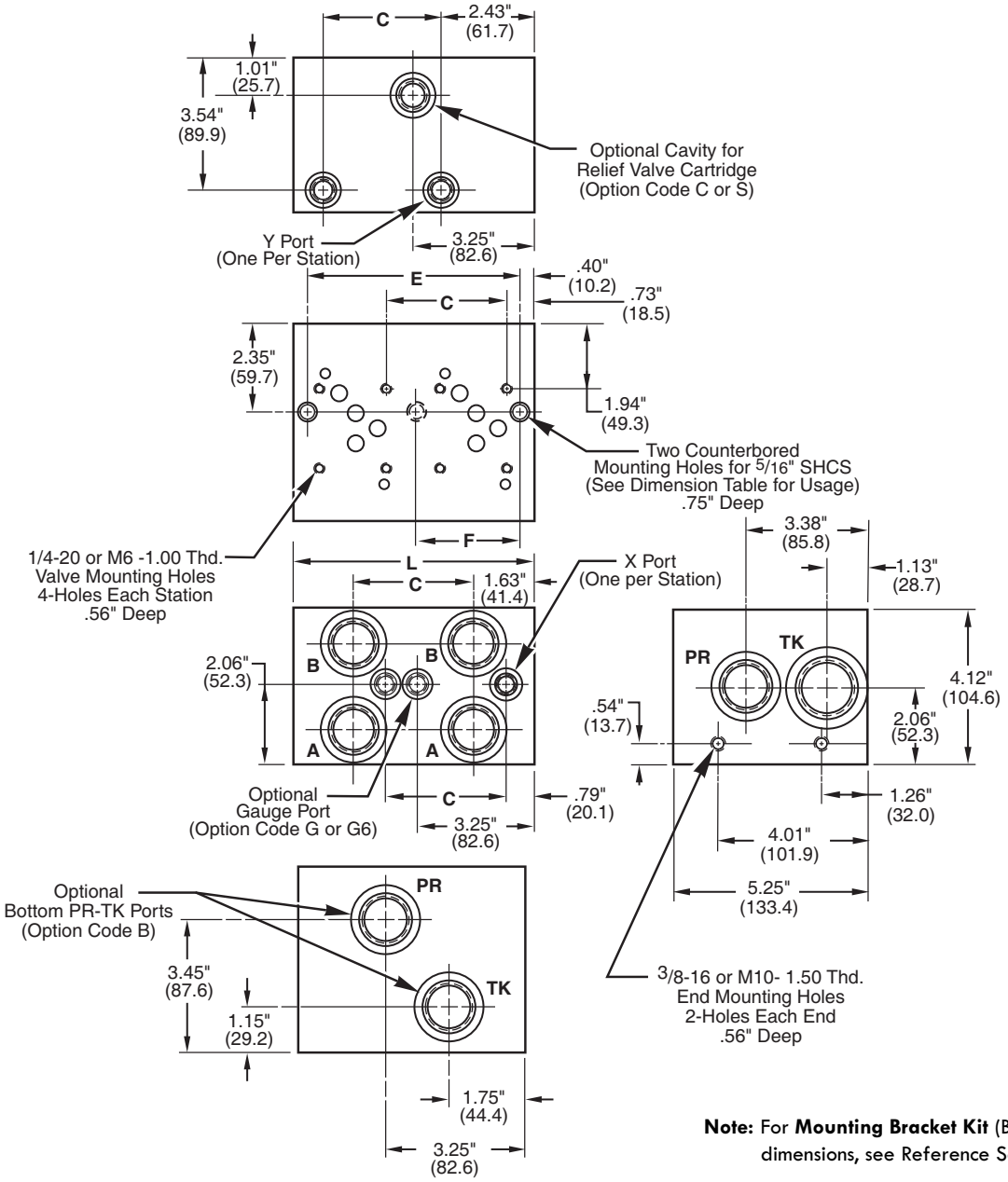

Note: For **Mounting Bracket Kit** (BK-A05) dimensions, see Reference Section, page 174

Port Size Chart

Thread Code	PR	TK	A & B	A & B (Oversize Option)	Optional Gauge Ports	X & Y
P	1" NPT	1 1/4" NPT	3/4" NPT	1" NPT	1/4" NPT	1/4" NPT
S	#16 SAE	#20 SAE	#12 SAE	#16 SAE	#4 SAE G6 - #6 SAE	#4 SAE
B	1" BSPP	1 1/4" BSPP	3/4" BSPP	1" BSPP	-	1/4" BSPP
T	1" BSPT	1 1/4" BSPT	3/4" BSPT	1" BSPT	-	1/4" BSPT
M	M33	M42	M27	M33	-	M12

D08 Bar Manifold - Parallel

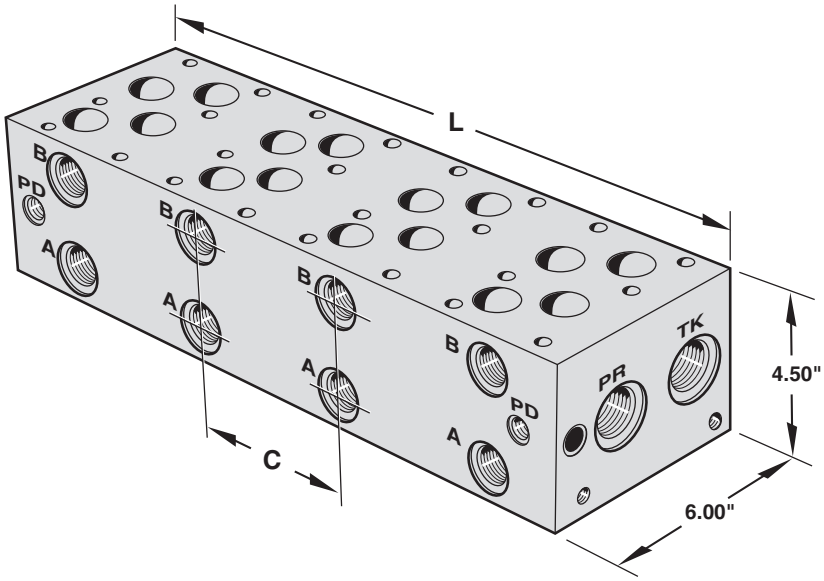

Features & Advantages

- + Available with SAE, NPT, BSPP, BSPT or Metric Threads to cover a wide range of applications.
- + Large pressure and tank passage for maximum flow capacity.
- + Common pilot drain connection.
- + Standard end mount and through holes. Mounting Bracket kit BK-A08 is supplied (no charge) as an alternate end mounting style.
- + Options include relief valve cavities, bottom PR & TK ports, and gauge port and PR & TK isolation.

Standard Mounting Bracket Kit

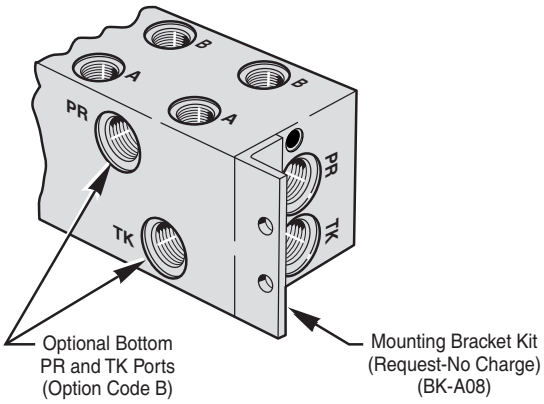

Optional Pilot Pressure Ports

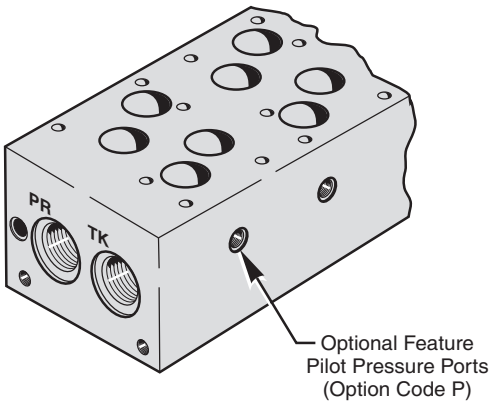

MAGNALOY D08 PARALLEL BAR MANIFOLD PART NUMBER BREAKDOWN

B M - A S P 0 8 P 5 - 0 2 - 0 / B

Product Code
BM-Inline Bar Manifold

Material Code
A - Aluminum
S - Ductile/Steel

Circuit Code
SP - Standard Flow Parallel Circuit

NFPA Pattern Code
08 - D08

Thread Code
P - NPTF Pipe
S - SAE O'Ring
B - BSPP British Parallel
T - BSPT British Taper
M - Metric ISO 6149
(See Port Chart for Standard Port Sizes)

Valve Spacing Code
5 - 5.25"
7 - 7.00"

Number of Valve Stations
01 - 1 station
02 - 2 stations
etc.

Design Series

Options
Z - No Option
B - Bottom PR-TK Ports
C - Relief Valve Cavity C-10-2
G - Gauge Port #4 SAE or 1/4 NPTF
G6 - Gauge Port #6 SAE
P - Pilot Pressures (Individual Per Station)
S - Relief Valve Cavity Sun T-3A
H - Hard Metric Threading (See Note 2, page 34)
M - Soft Metric Threading (See Note 3, page 34)
I - Isolation Plug [1] - List as last option designated (See Note 1, page 34)

magnaloy coupling company 501 Commerce Drive Alpena, MI 49707 989 356-2186
A Division of Douville Johnston Corporation Fax: 989 354-4190 http://www.magnaloy.com

D08 Bar Manifold - Parallel

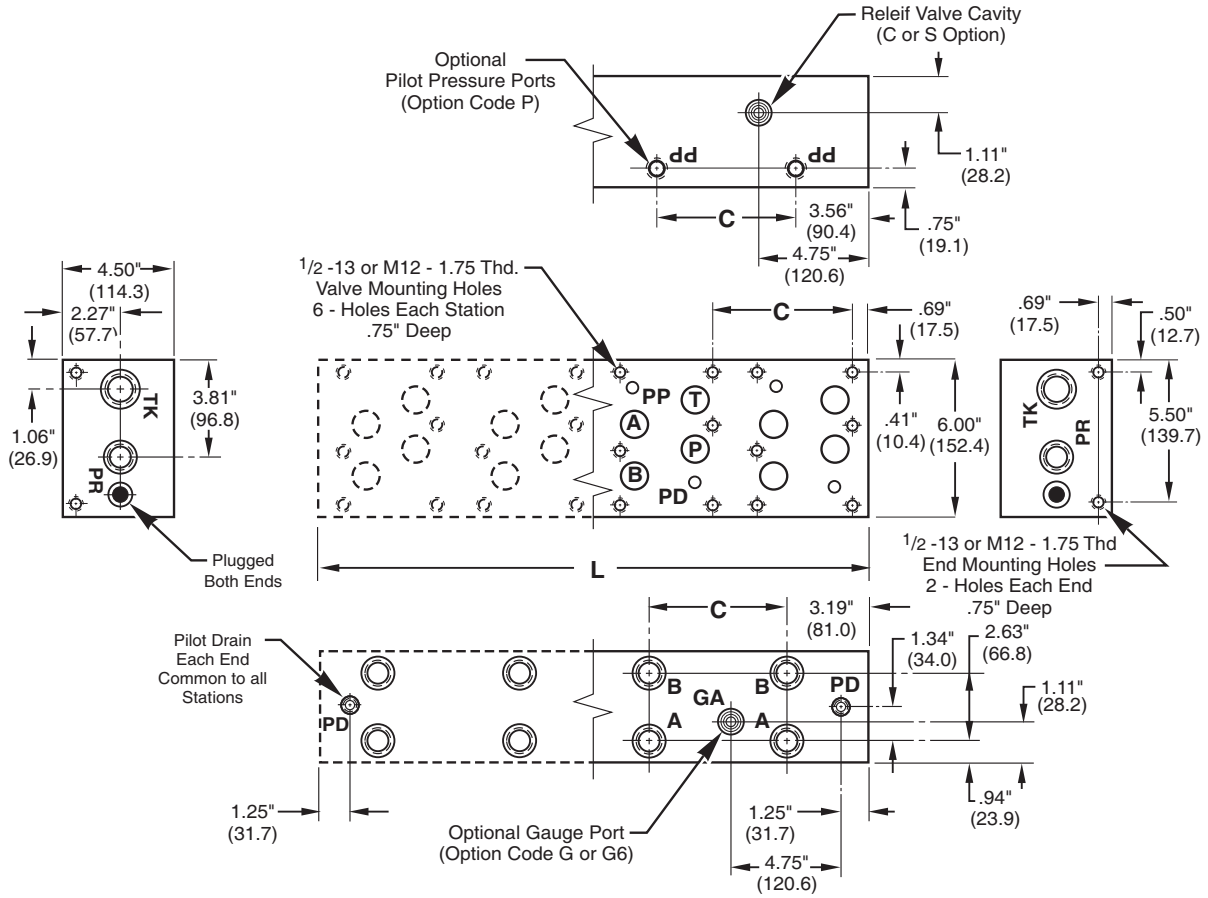

No. of Stations	C		L	
	Valve Spacing		Valve Spacing	
	5.25"	7.00"	5.25"	7.00"
1	--	--	5.56"	--
2	5.25"	7.00"	10.81"	12.56"
3	5.25"	7.00"	16.06"	19.56"
4	5.25"	7.00"	21.31"	26.56"
5	5.25"	7.00"	26.56"	--
6	5.25"	7.00"	31.81"	--

Additional stations available, consult factory.

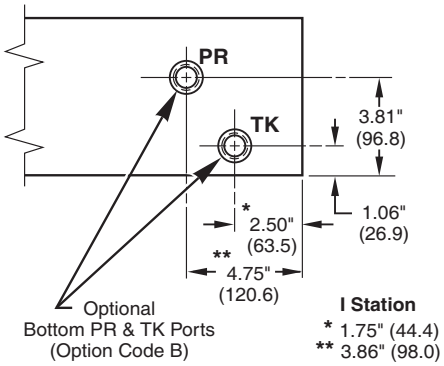

Port Size Chart

Thread Code	PR	TK	A & B	PD & Pilot Pressure Ports	Optional Gauge Port
P	1" NPT	1 1/4" NPT	1" NPT	3/8" NPT	1/4" NPT
S	#16 SAE	#20 SAE	#16 SAE	#6 SAE	#4 SAE G6 - #6 SAE
B	1" BSPP	1 1/4" BSPP	1" BSPP	3/8" BSPP	-
T	1" BSPT	1 1/4" BSPT	1" BSPT	3/8" BSPT	-
M	M33	M42	M33	M14	-

NOTE: For Mounting Bracket Kit (BK-A08) dimensions, see Reference Section, page 174

D08 High Flow Retro Design Bar Manifold - Parallel

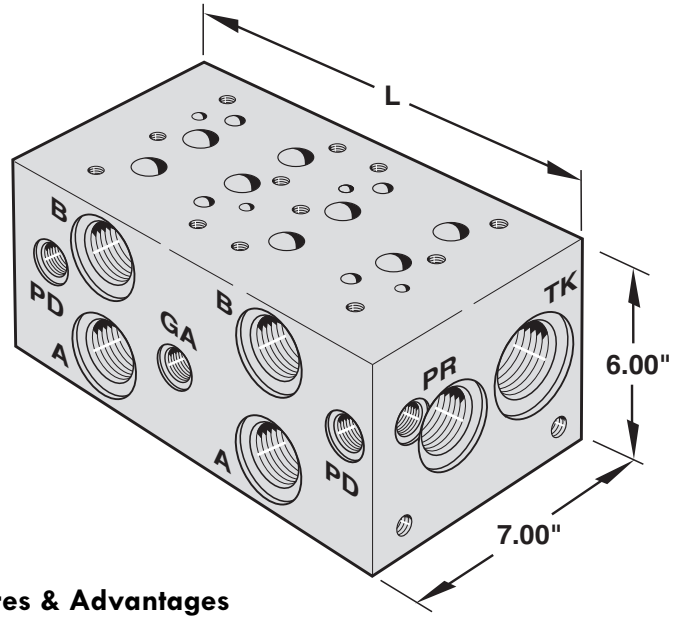

Dimensions (5.25" Valve Spacing)

No. of Stations	C	L
1	--	6.25"
2	5.25"	11.50"
3	5.25"	16.75"
4	5.25"	22.00"
5	5.25"	27.25"
6	5.25"	32.50"

Dimensions (7.00" Valve Spacing)

No. of Stations	C	L
2	7.00"	13.25"
3	7.00"	20.25"
4	7.00"	27.25"
5	7.00"	34.25"

3

Features & Advantages

- + The high flow design provides maximum flow rates with minimum pressure drops.
- + 5 1/4" or 7" valve center option allow the manifold to be sized for specific D08 valve types.
- + Standard end mounting holes make mounting easy and flexible. Also, a mounting bracket kit (BKR-A08) is supplied with the manifold.
- + Available with SAE, NPT, BSPP, BSPT or Metric Threads to cover a wide range of applications.
- + Options include relief valve cavity, bottom PR & TK ports, and 'PR' isolation to fit specific circuit requirements.
- + Standard Gauge Port is 1/4" NPT with "P" code and #6 SAE with "S" Code (#4 SAE available with G4 option).

MAGNALOY D08 PARALLEL BAR MANIFOLD PART NUMBER BREAKDOWN

B M R - A H P 0 8 P 7 - 0 2 - 1 / B

Product Code
BMR-Inline Bar Manifold
Retro Design

Material Code
A - Aluminum
S - Ductile/Steel

Circuit Code
HP- High Flow Parallel Circuit

NFPA Pattern Code
08 - D08

Thread Code
P - NPTF Pipe
S - SAE O'Ring
B - BSPP British Parallel
T - BSPT British Taper
M - Metric ISO 6149
(See Port Chart for Standard Port Sizes)

Options
Z - No Option
B - Bottom PR-TK Ports
C - Relief Valve Cavity C-16-2
G4 - Gauge Port #4 SAE
P - Pilot Pressures (Individual Per Valve)
S - Relief Valve Cavity Sun T-16A
M - Soft Metric Threading (See Note 3, page 34)
I - Isolation Plug [1] - Consult Factory for Port Isolation Option Availability.
(See Note 1, page 34 and Reference Section page 173)

Design Series

Number of Valve Stations
01 - 1 station
02 - 2 stations
etc.

Valve Spacing Code
5 - 5.25"
7 - 7.00"

magnaloy coupling company 501 Commerce Drive Alpena, MI 49707 989 356-2186
A Division of Douville Johnston Corporation Fax: 989 354-4190 http://www.magnaloy.com

D08 High Flow Retro Design Bar Manifold - Parallel

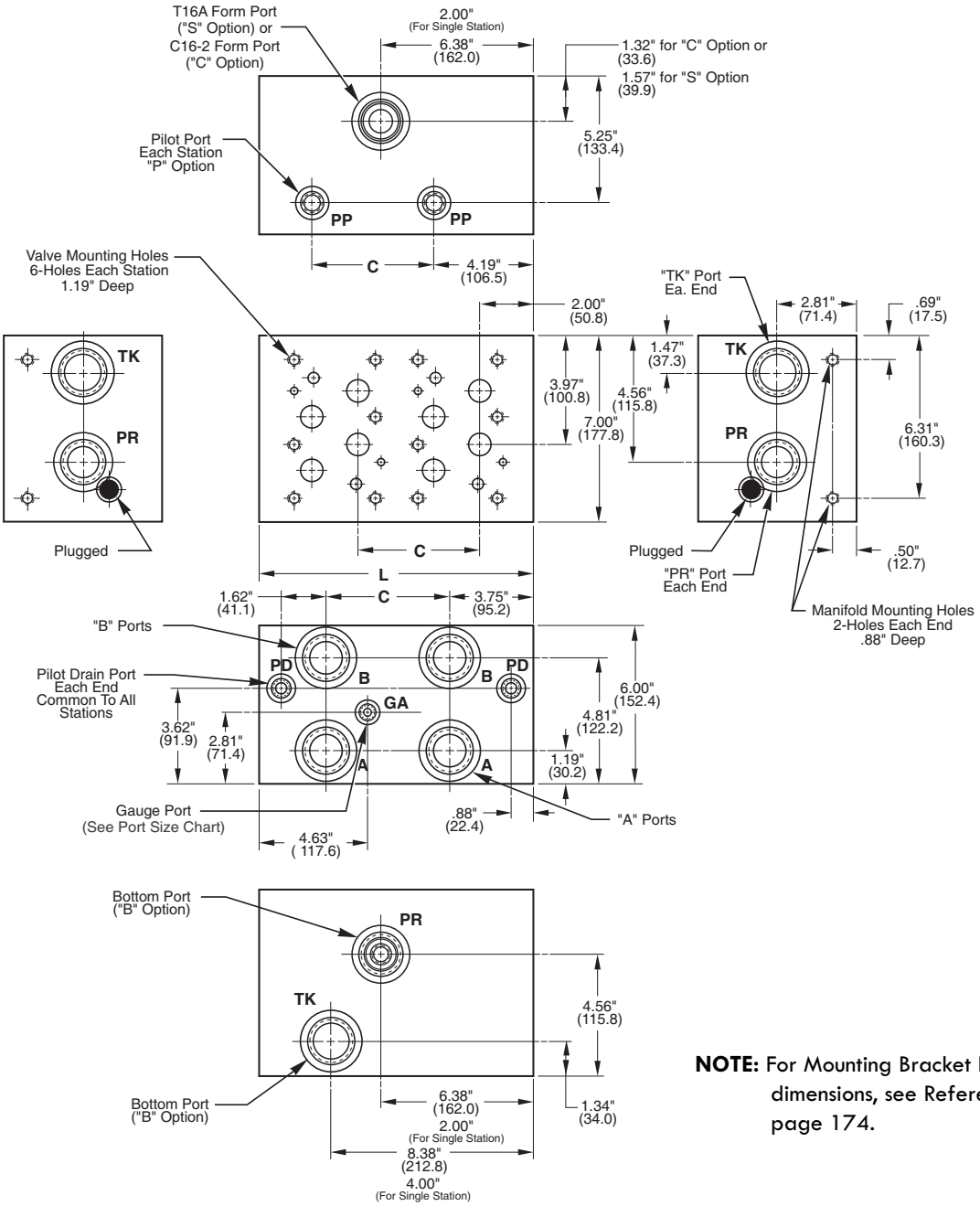

NOTE: For Mounting Bracket Kit (BKR-A08) dimensions, see Reference Section, page 174.

Port Size Chart

Thread Code	PR	TK	A & B	Pilots		Gauge Port	Mounting Holes	
				PD	PP		Valve	Manifold
P	1 1/4" NPT	1 1/2" NPT	1 1/4" NPT	1/2" NPT	1/4" NPT	1/4" NPT	1/2-13 UNC	1/2-13 UNC
S	#20 SAE	#24 SAE	#20 SAE	#8 SAE	#4 SAE	G4 - #4 SAE #6 SAE	1/2-13 UNC	1/2-13 UNC
B	1 1/4" BSPP	1 1/2" BSPP	1 1/4" BSPP	1/2" BSPP	1/4" BSPP	-	M12-1.75	M12-1.75
T	1 1/4" BSPT	1 1/2" BSPT	1 1/4" BSPT	1/2" BSPT	1/4" BSPT	-	M12-1.75	M12-1.75
M	M42 x 2	M48 x 2	M42 x 2	M16 x 1.5	M10 x 1.0	-	M12-1.75	M12-1.75

magnaloy coupling company *501 Commerce Drive Alpena, MI 49707* ***989 356-2186***
A Division of Douville Johnston Corporation *Fax: 989 354-4190* *http://www.magnaloy.com*

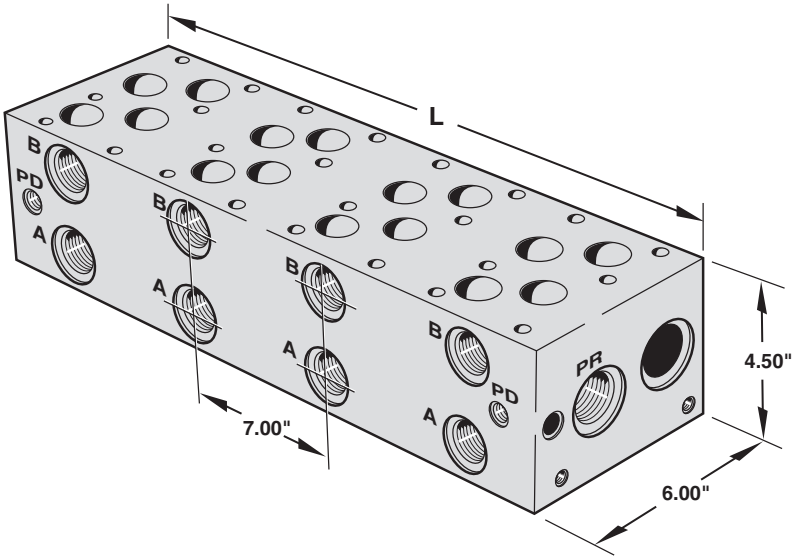

Features & Advantages

* Available with SAE, NPT, BSPP, BSPT or Metric Threads to cover a wide range of applications.
* Large pressure and tank passages for maximum flow capacity.
* Common pilot drain connections.
* Standard end mounting holes make mounting easy and flexible. Also, a mounting bracket kit (BK-A08) is supplied (when requested) as an alternate end mounting style.

Standard Mounting Bracket Kit

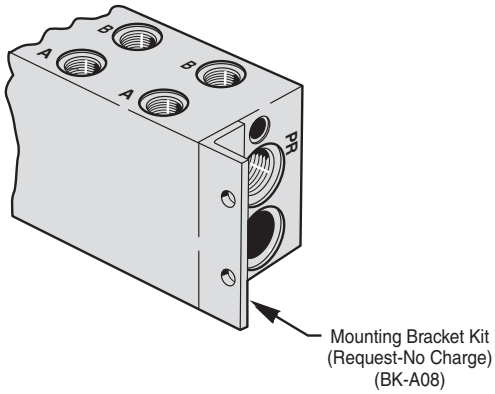

Optional Pilot Pressure Ports

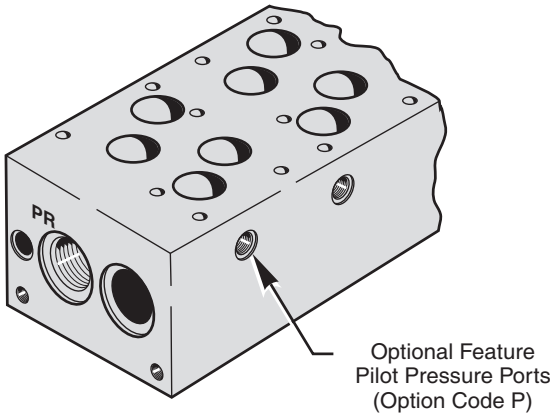

MAGNALOY D08 SERIES BAR MANIFOLD PART NUMBER BREAKDOWN

B M - A S S 0 8 P 7 - 0 2 - 0 / P

Product Code
BM-Inline Bar Manifold

Material Code
A - Aluminum
S - Ductile/Steel

Circuit Code
SS - Series Circuit

NFPA Pattern Code
08 - D08

Thread Code
P - NPTF Pipe
S - SAE O'Ring
B - BSPP British Parallel
T - BSPT British Taper
M - Metric ISO 6149
(See Port Chart for Standard Port Sizes)

Options
Z - No Option
G - Gauge Port #4 SAE or 1/4 NPTF
G6 - Gauge Port #6 SAE
P - Pilot Pressures (Individual Per Valve)
H - Hard Metric Threading (See Note 2, page 34)
M - Soft Metric Threading (See Note 3, page 34)

Design Series

Number of Valve Stations
02 - 2 stations
03 - 3 stations
etc.

Valve Spacing Code
7 - 7.00" Only

magnaloy coupling company 501 Commerce Drive Alpena, MI 49707 989 356-2186
A Division of Douville Johnston Corporation Fax: 989 354-4190 http://www.magnaloy.com

D08 Bar Manifold - Series

Length (L) 7.00" Spacing Only			
No. of Stations	**2**	**3**	**4**
Valve Center Spacing	12.56"	19.56"	26.56"

Additional stations available, consult factory.

Note: Relief Cavities and Gauge Port not available in standard D08 Series Manifolds

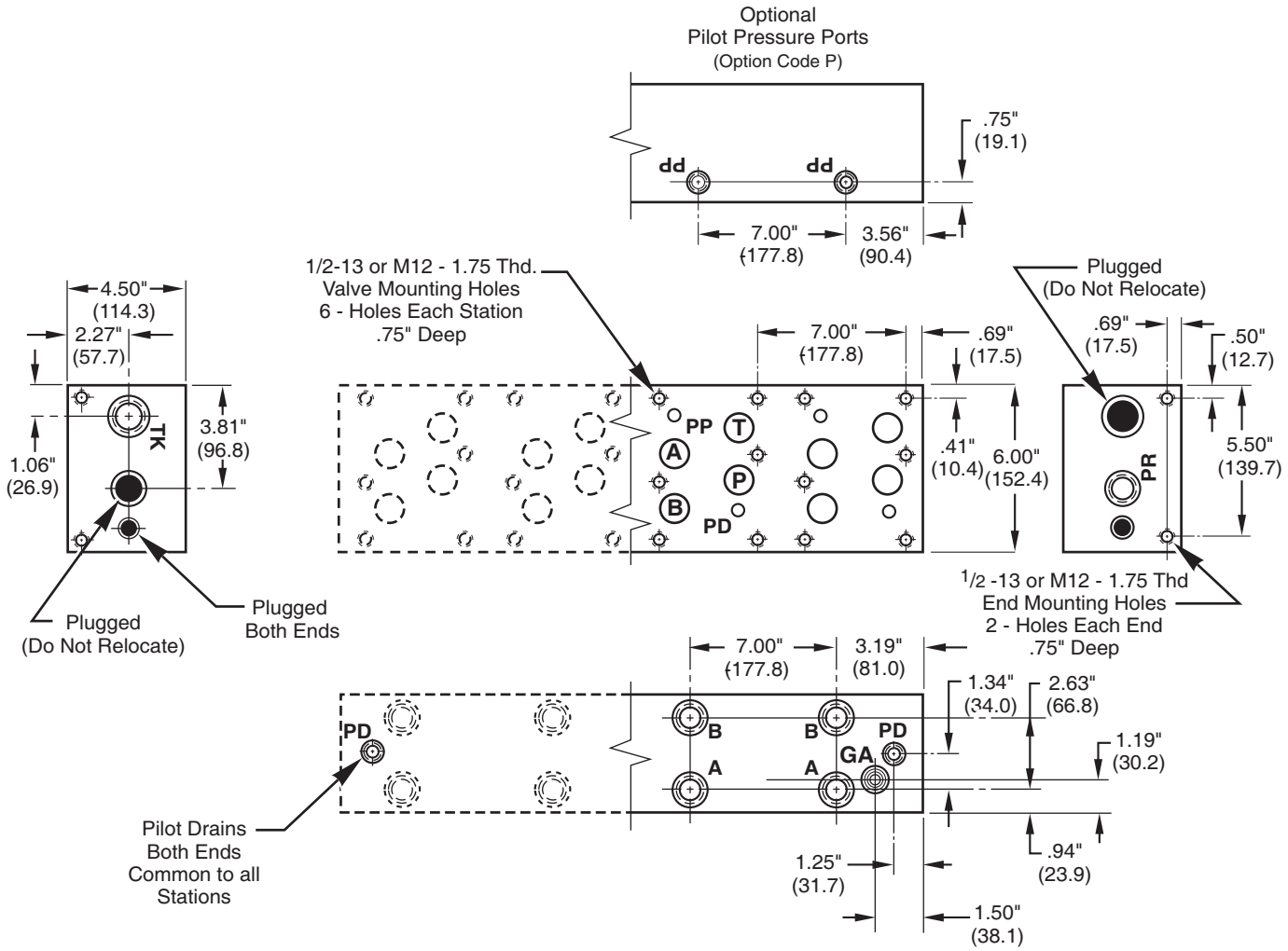

Port Size Chart

Thread Code	PR	TK	A & B	PD & Pilot Pressure Ports	Optional Gauge Port
P	1" NPT	1 1/4" NPT	1" NPT	3/8" NPT	1/4" NPT
S	#16 SAE	#20 SAE	#16 SAE	#6 SAE	#4 SAE G6 - #6 SAE
B	1" BSPP	1 1/4" BSPP	1" BSPP	3/8" BSPP	-
T	1" BSPT	1 1/4" BSPT	1" BSPT	3/8" BSPT	-
M	M33	M42	M33	M14	-

NOTE: For Mounting Bracket Kit (BK-A08) dimensions, see Reference Section, page 174.

magnaloy coupling company *501 Commerce Drive Alpena, MI 49707* ***989 356-2186***
A Division of Douville Johnston Corporation *Fax: 989 354-4190* *http://www.magnaloy.com*

INDEX:

63 D05 Tank Line Feed Control Manifold

64 D05 Feed Control Manifold - Cylinder Port Meter Out and Meter In

65 D05 Solenoid Activated Regeneration Module

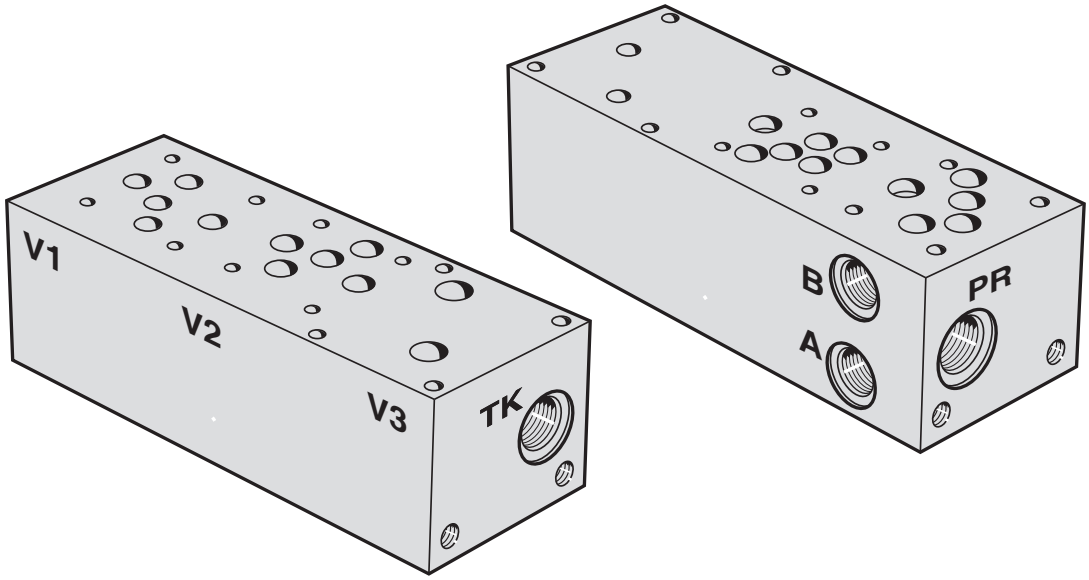

MAGNALOY IC MANIFOLD PART NUMBER BREAKDOWN

***IC - A 05 P 41 - 0**

Product Code
IC - Integrated Circuit Manifold

Material Code
A - Aluminum
S - Ductile/Steel

NFPA Pattern Code
05 - D05

Port Thread Type Code
P - NPTF Pipe
S - SAE O'Ring

Item Designation
11 - Tank Line Feed Control Manifold
31 - Solenoid Activated Regeneration
41 - Feed Control Manifold - Meter Out
42 - Feed Control Manifold - Meter In

Design Series

* *See following Integrated Circuit Pages for specific Magnaloy standard configurations with options.*

magnaloy coupling company *501 Commerce Drive Alpena, MI 49707* ***989 356-2186***
A Division of Douville Johnston Corporation *Fax: 989 354-4190* *http://www.magnaloy.com*

Integrated Circuit Manifold

D05 Tank Line Feed Control Manifold

The integrated circuit manifold, Number IC-A05x11-0 and IC-S05x11-0, provides a "Meter Out" pressure compensated flow control circuit. The flow control is placed in the tank line to allow control in either/both direction(s) of travel. Selector valve (V2) allows electrical switching from rapid travel (nominal flow of 10 GPM) to feed (from fractional to 6.5 GPM). Note: Single rod end cylinders will not have the same speed in both directions.

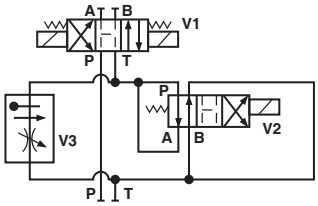

Valves Required

V1 — Directional Control Valve (NFPA DO5)
V2 — Directional Control Valve, Spring Off-Set (NFPA DO5)
V3 — Pressure Compensated Flow Control (NFPA 2F02)

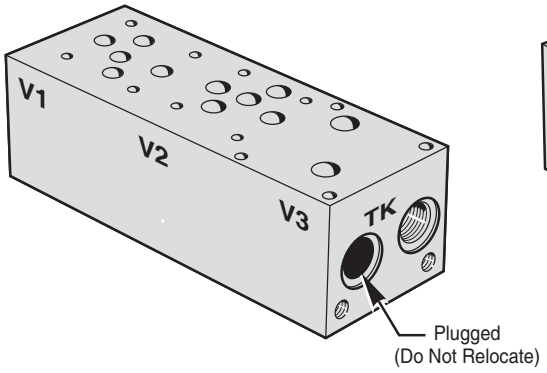

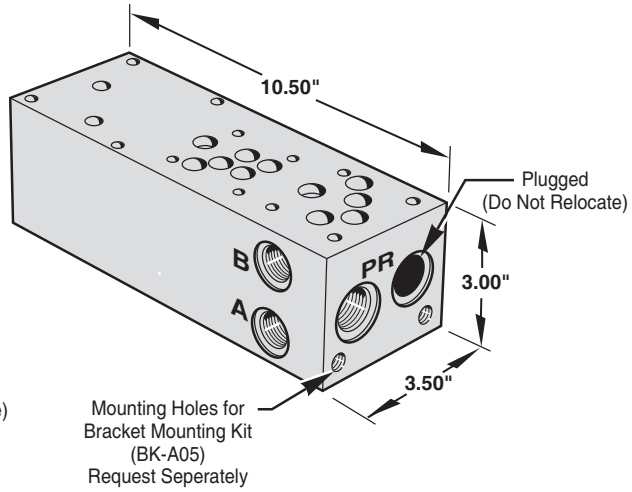

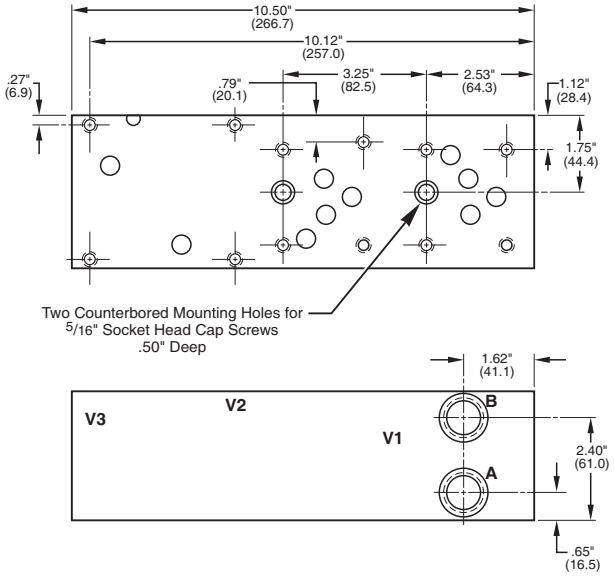

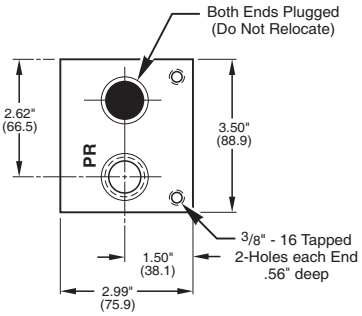

Port Designation	IC-_05P11-0	IC-_05S11-0
A & B	1/2" NPTF	#8 SAE
PR	3/4" NPTF	#12 SAE
TK	3/4" NPTF	#12 SAE

Part Number	
SAE	IC-A05S11-0 Aluminum IC-S05S11-0 Ductile/Steel
NPT	IC-A05P11-0 Aluminum IC-S05P11-0 Ductile/Steel

NOTE: For Mounting Bracket Kit (BK-A05) dimensions, see Reference Section, page 174.

MAGNALOY IC MANIFOLD PART NUMBER BREAKDOWN

I C - A 0 5 P 1 1 - 0

Product Code
IC - Integrated Circuit Manifold

Material Code
A - Aluminum
S - Ductile/Steel

NFPA Pattern Code
05 - D05

Port Thread Type Code
P - NPTF Pipe
S - SAE O'Ring

Item Designation
11 - Tank Line Feed Control Manifold

Design Series

D05 Feed Control Manifold - Cylinder Port Meter Out/In

The integrated circuit manifold, Number IC-_05x41-0, provides a "Meter Out" and IC-_05x42 provides a "Meter In" pressure compensated flow control circuit. The flow control is placed in the port line in parallel with a selector valve which allows electrical switching to rapid transverse (nominal flow of 10 GPM) or controlled speed (from fractional to 6.5 GPM).

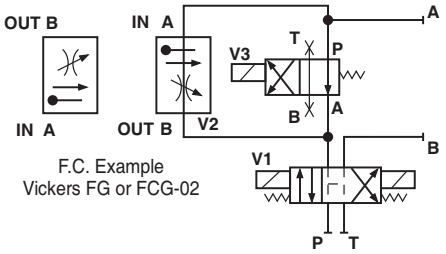

F.C. Example
Vickers FG or FCG-02

Valves Required

V1 — Directional Control Valve (NFPA DO5)
V2 — Pressure Compensated Flow Control Valve (NFPA 2F02)
V3 — Directional Control Valve, Spring Offset,
Open Center Spool Recommended (NFPA DO5)

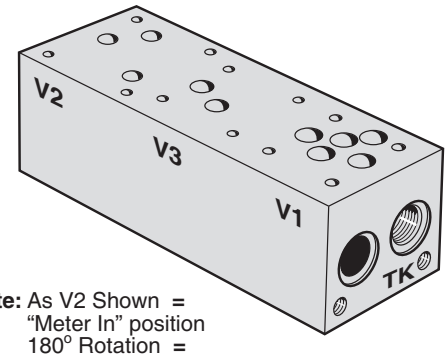

Note: As V2 Shown =
"Meter In" position
180° Rotation =
"Meter Out" position

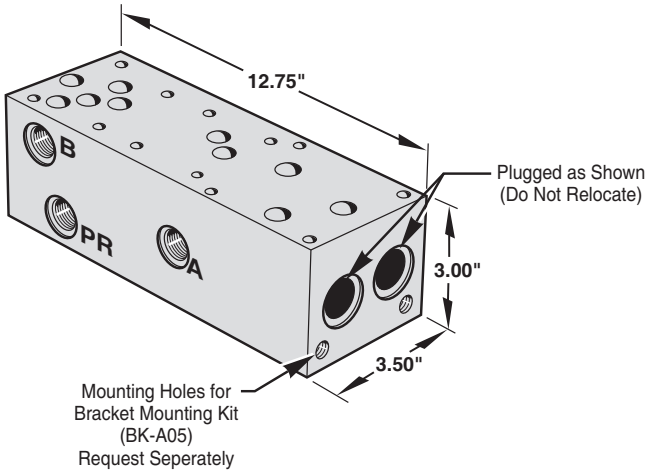

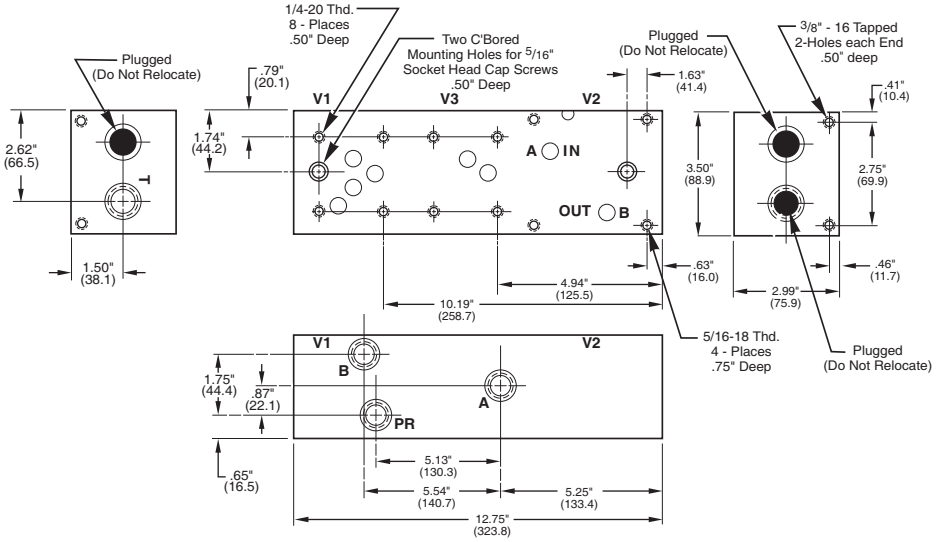

NOTE: For Mounting Bracket Kit (BK-A05) dimensions, see Reference Section, page 174

Port Designation	IC-_05P4_-0	IC-_05S4_-0
A,B & P	1/2" NPT	#8 SAE
TK	3/4" NPT	#12 SAE

Part Number	
SAE	IC-A05S4_-0 Aluminum IC-S05S4_-0 Ductile/Steel
NPT	IC-A05P4_-0 Aluminum IC-S05P4_-0 Ductile/Steel

MAGNALOY IC MANIFOLD PART NUMBER BREAKDOWN

I C - A 0 5 P 4 1 - 0

Product Code
IC - Integrated Circuit Manifold

Material Code
A - Aluminum
S - Ductile/Steel

NFPA Pattern Code
05 - D05

Port Thread Type Code
P - NPTF Pipe
S - SAE O'Ring

Item Designation
41 - Feed Control Manifold - Meter Out
42 - Feed Control Manifold - Meter In

Design Series

magnaloy coupling company 501 Commerce Drive Alpena, MI 49707 989 356-2186
A Division of Douville Johnston Corporation Fax: 989 354-4190 http://www.magnaloy.com

D05 Solenoid Activated Regeneration Module

The integrated circuit modules, Number IC-A05x31-0 and IC-S05x31-0, provide a regeneration circuit where the oil is discharged from the rod end of a differential area, (2:1) cylinder is combined with the pump flow for rapid, regenerative, forward travel. The module must be mounted on a 2 station, DO5, parallel bar manifold (see page 41) to complete the circuit assembly.

When the machine cycle requires full force, an electrical signal to directional control valve V2 redirects rod end flow to tank through valve V1. Alternate ports are provided for both the rod end connection (AA) (BB) and cap end connection (A) (B). This allows the designer to select whether regeneration occurs when V2 is energized or de-energized and a choice of cylinder port combinations. Ports not used should be plugged with plugs provided.

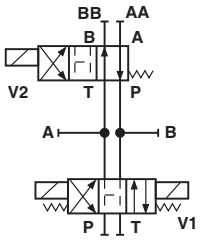

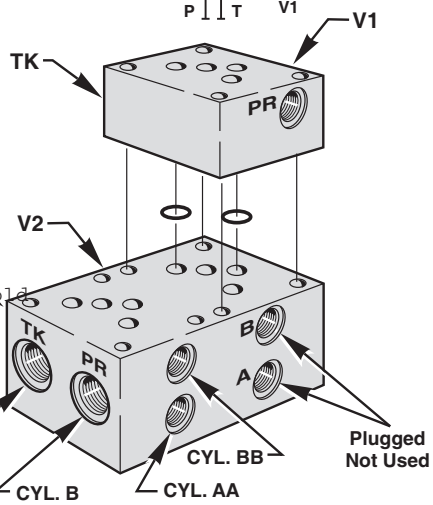

Valves Required

V1 — Directional Control Valve (NFPA DO5)
V2 — Directional Control Valve, Spring Offset,
Open Center Spoon Recommended (NFPA DO5)

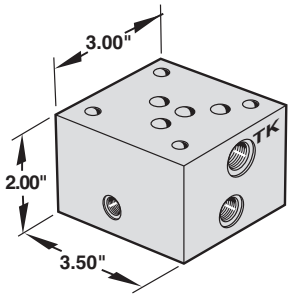

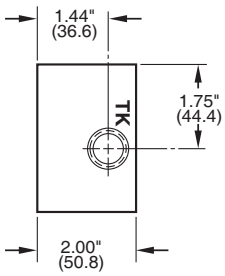

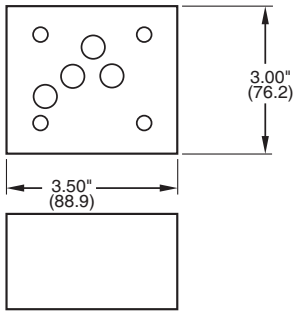

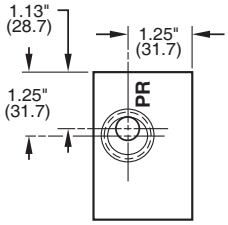

Port Designation	IC-_05P31-0	IC-_05S31-0
Pressure Conn	1/2" NPTF	#8 SAE
Tank Conn	1/2" NPTF	#8 SAE
Cyl AA & BB	1/2" NPTF	#8 SAE
Cyl A & B	3/4" NPTF	#12 SAE

Part Number	
SAE	IC-A05S31-0 Aluminum IC-S05S31-0 Ductile/Steel
NPT	IC-A05P31-0 Aluminum IC-S05P31-0 Ductile/Steel

Supplied Hardware

O-Rings — Viton (2) 5/8" OD x 1/2" ID x 1/16" CS

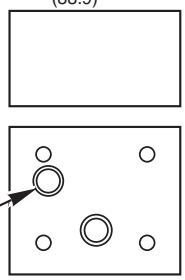

O'Ring Pocket for
5/8" O.D. O'Ring
2 - Places

MAGNALOY IC MANIFOLD PART NUMBER BREAKDOWN

I C - A 0 5 P 3 1 - 0

Product Code
IC - Integrated Circuit Manifold

Material Code
A - Aluminum
S - Ductile/Steel

NFPA Pattern Code
05 - D05

Port Thread Type Code
P - NPTF Pipe
S - SAE O'Ring

Item Designation
31 - Solenoid Activated Regeneration

Design Series

magnaloy coupling company 501 Commerce Drive Alpena, MI 49707 989 356-2186
A Division of Douville Johnston Corporation Fax: 989 354-4190 http://www.magnaloy.com

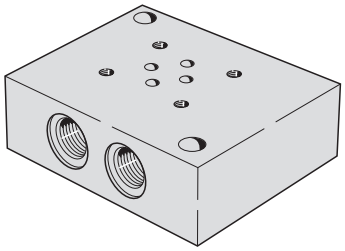

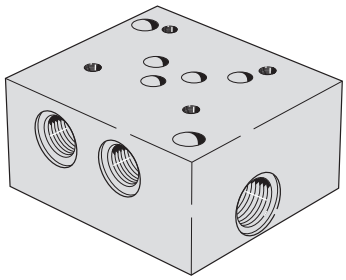

INDEX		Part Number	
Super Saver Subplates		**Aluminum**	**Ductile/Steel**
67	NFPA D03 Valves - Perimeter Ported	SP-A03_-1/PZ	SP-S03_-1/PZ
68	NFPA D03 Valves - Down Side Ported	SP-A03_-1/DZ	SP-S03_-1/DZ
69	NFPA D05 Valves - Perimeter Ported	SP-A05_-1/PZ	SP-S05_-1/PZ
70	NFPA D05 Valves - Down Side Ported	SP-A05_-1/DZ	SP-S05_-1/DZ
Side Ported Subplates		**Aluminum**	**Ductile/Steel**
71	NFPA D03 Valves - Side Ported	SP-A03_-1/_	SP-S03_-1/_
72	NFPA D05 Valves - Side Ported	SP-A05_-1/_	SP-S05_-1/_
73	NFPA D05 Valves - High Flow Side Ported	SP-AH05_-1/_	SP-SH05_-1/_
74	NFPA D08 Valves - Side Ported	SP-A08_-1/_	SP-S08_-1/_

Standard Subplate - includes specified NFPA valve pattern mounting on the top surface of the subplate, A & B ports per the specified thread type on the sides of the subplate and pressure and tank ports per the specified thread type on the bottom and side surfaces of the subplate. Mounting provisions include two (2) counter bored through holes on the top surface of the subplate.

Options:

- **Z** - No Relief Valve Cavity - specifies that no relief valve cavity is provided (standard subplate).
- **B** - Bottom PR & TK ports - additional pressure and tank ports per specified thread type located on the bottom of the subplate. (Not available with P or D options).
- **C** - Relief Valve Cavity - common cavity configuration added to a back surface of the subplate.
- **D** - Down Side Porting - (Super Saver - DZ) - all 4 ports (A, B, PR & TK) are located on the bottom surface of the subplate. No other porting or options are provided.
- **P** - Perimeter Porting - (Super Saver - PZ) - locates the A, B, PR & TK ports on a separate side surface of the subplate. No other porting or options are provided.
- **S** - Relief Valve Cavity - Sun cavity configuration added to a back surface of the subplate.
- **G** - #4 SAE Gauge Port with "S", "B", or "M" thread code OR 1/4" NPT with "P" or "T" thread code.
- **G6** - #6 SAE Gauge Port with "S", "B" or "M" thread code.
- **H** - Hard Metric Threading - when British or Metric thread type is specified, the valve mounting holes are also metric threaded.
- **S** - Soft Metric Threading - indicates mixed metric threading. When NPT or SAE thread type is specified, valve mounting holes are metric threaded. No Code (M) indicates the valve mounting holes are English threaded.

MAGNALOY SUBPLATE PART NUMBER BREAKDOWN

***S P - A 0 3 P _ - 1 / B Z**

Product Code
SP - Subplate

Material Code
A - Aluminum
S - Ductile/Steel

NFPA Pattern Code
03 - D03
05 - D05
08 - D08

Thread Code
P - NPTF Pipe
S - SAE O'Ring
B - BSPP British Parallel
T - BSPT British Taper
M - Metric ISO 6149
(See Port Chart for Standard Sizes)

Design Series

Options
Z - No Relief Cavity
B - Bottom PR-TK Ports
C - Relief Valve Cavity C-10-2
G - Gauge Port #4 SAE or 1/4" NPTF
G6 - Gauge Port #6 SAE
P - Perimeter Porting - All 4 Sides Ported (Super Saver-P) (No other options available)
S - Relief Valve Cavity Sun T-10A
D - Down Side Porting - All 4 Ports on Bottom (Super Saver-D) (No other options available)
H - Hard Metric Threading (See Note 2, page 34)
M - Soft Metric Threading (See Note 3, page 34)
Note: For more than two combined options, consult factory.

* ***See following Subplate Pages for specific Magnaloy standard configurations with options.***

magnaloy coupling company *501 Commerce Drive Alpena, MI 49707* ***989 356-2186***
A Division of Douville Johnston Corporation *Fax: 989 354-4190* *http://www.magnaloy.com*

D03 - Perimeter Ported

Application:

Subplate used for mounting directional valve with NFPA D03 Interface.

A, B, PR & TK ports on 4 separate sides.

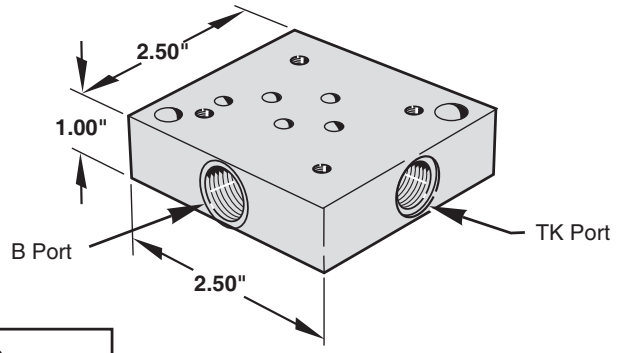

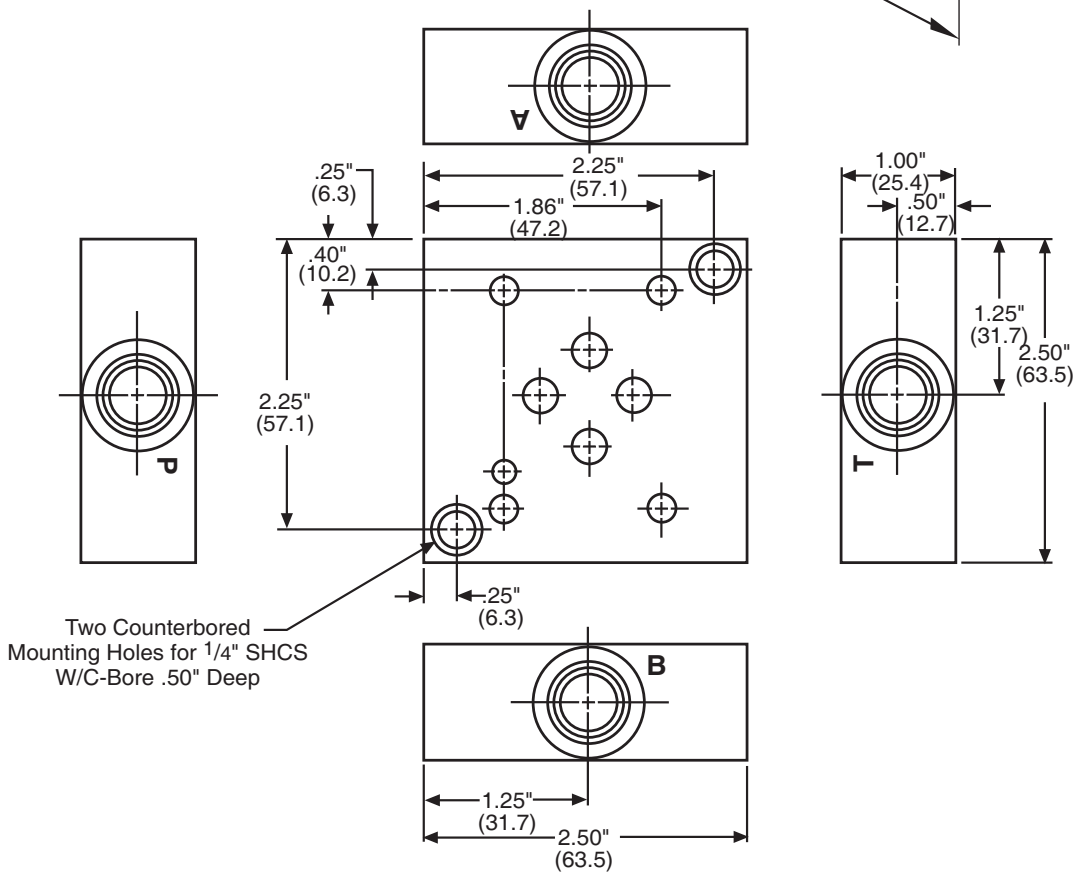

*

Thread Code	PR, TK, A & B
P4	1/4" NPT
S4	#4 SAE
B4	1/4" BSPP
T4	1/4" BSPT
M4	M10 x 1.0
P6	3/8" NPT
S6	#6 SAE
B6	3/8" BSPP
T6	3/8" BSPT
M6	M14 x 1.5

MAGNALOY D03 SUPER SAVER SUBPLATE PART NUMBER BREAKDOWN

S P - A 0 3 S 4- 1 / P Z

Product Code
SP - Subplate

Material Code
A - Aluminum
S - Ductile/Steel

NFPA Pattern Code
03 - D03

Options
PZ - Perimeter Porting - All 4 Sides Ported & No Relief Cavity (Super Saver-PZ)

Design Series

Thread Code *
P - NPTF Pipe
S - SAE O'Ring
B - BSPP British Parallel
T - BSPT British Taper
M - Metric ISO 6149
(See Port Chart for Standard Sizes)

D03 - Down Side Ported

Application:

Subplate used for mounting directional valve with NFPA D03 Interface.

A, B, PR & TK ports on bottom surface.

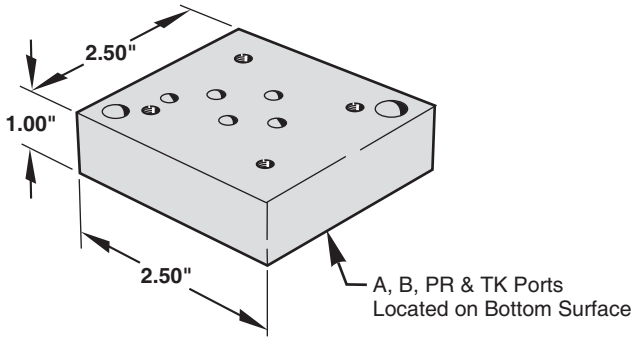

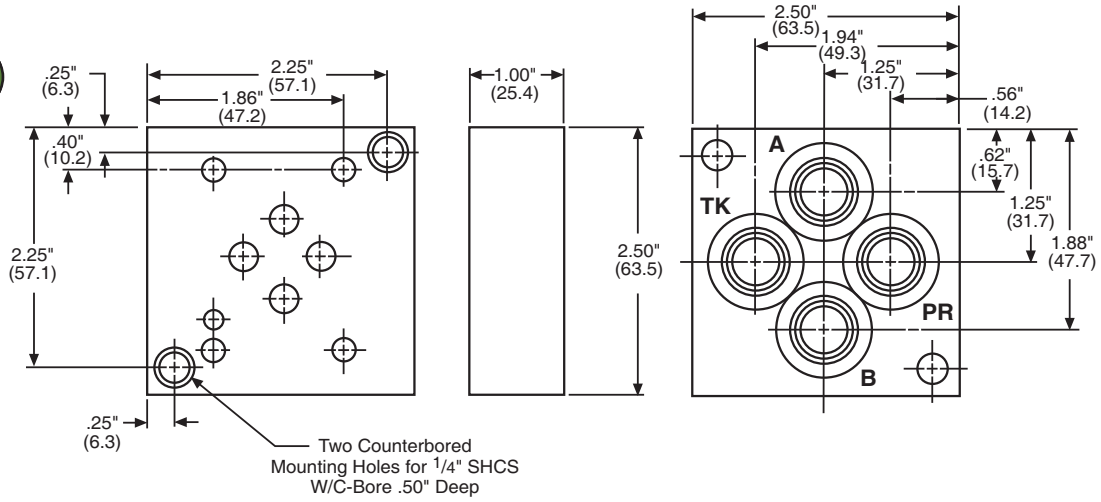

*

Thread Code	PR, TK, A & B
P4	1/4" NPT
S4	#4 SAE
B4	1/4" BSPP
T4	1/4" BSPT
M4	M10 x 1.0
P6	3/8" NPT
S6	#6 SAE
B6	3/8" BSPP
T6	3/8" BSPT
M6	M14 x 1.5

MAGNALOY D03 SUPER SAVER SUBPLATE PART NUMBER BREAKDOWN

S P - A 0 3 P 4- 1 / D Z

Product Code
SP - Subplate

Material Code
A - Aluminum
S - Ductile/Steel

NFPA Pattern Code
03 - D03

Thread Code *
P - NPTF Pipe
S - SAE O'Ring
B - BSPP British Parallel
T - BSPT British Taper
M - Metric ISO 6149
(See Port Chart for Standard Sizes)

Design Series

Options
DZ - Down Side Porting - All 4 Ports on Bottom & No Relief Cavity (Super Saver-DZ)

magnaloy coupling company 501 Commerce Drive Alpena, MI 49707 989 356-2186
A Division of Douville Johnston Corporation Fax: 989 354-4190 http://www.magnaloy.com

D05 - Perimeter Ported

Application:

Subplate used for mounting directional valve with NFPA D05 Interface.

A, B, PR & TK ports on 4 separate sides.

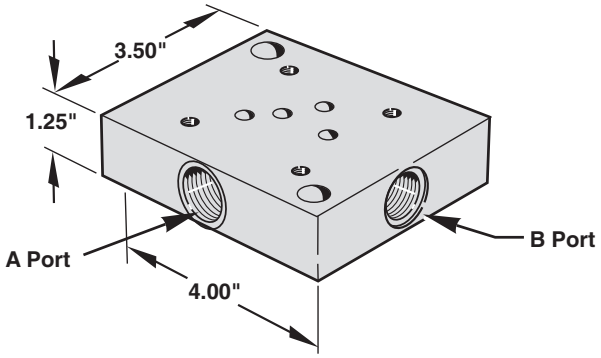

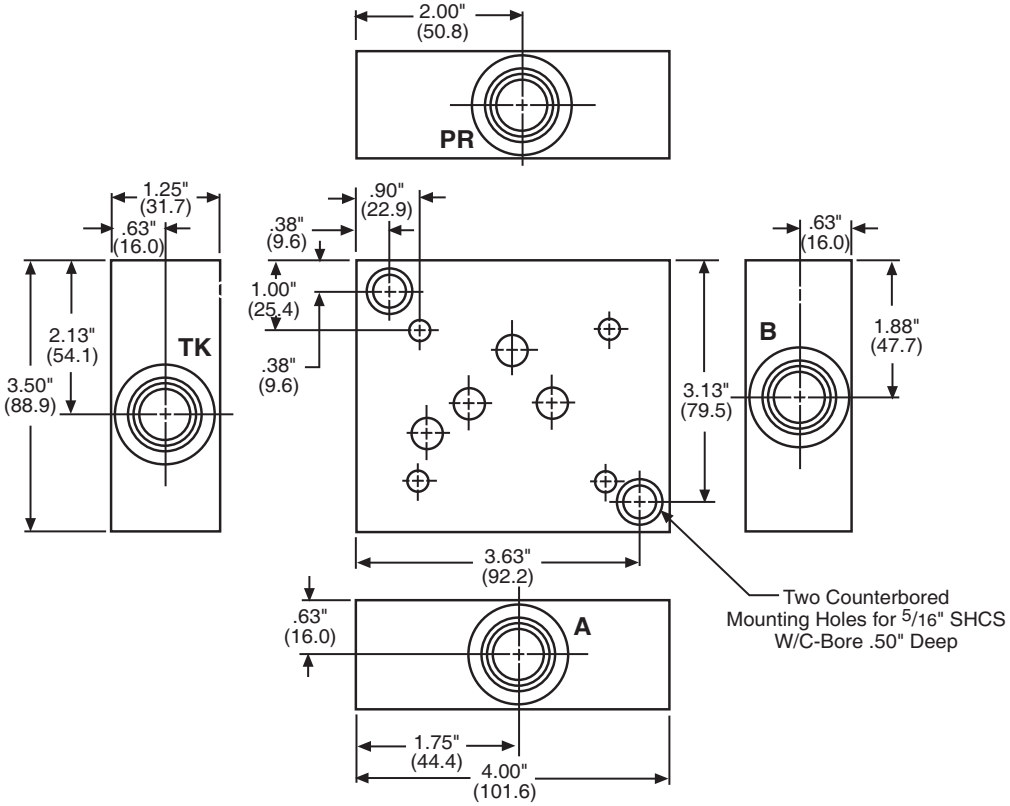

*

Thread Code	PR, TK, A & B
P6	3/8" NPT
S6	#6 SAE
B6	3/8" BSPP
T6	3/8" BSPT
M6	M14 x 1.5
P8	1/2" NPT
S8	#8 SAE
B8	1/2" BSPP
T8	1/2" BSPT
M8	M18 x 1.5

MAGNALOY D05 SUPER SAVER SUBPLATE PART NUMBER BREAKDOWN

S P - A 0 5 S 6- 1 / P Z

Product Code
SP - Subplate

Material Code
A - Aluminum
S - Ductile/Steel

NFPA Pattern Code
05 - D05

Options
PZ - Perimeter Porting - All 4 Sides Ported & No Relief Cavity (Super Saver-PZ)

Design Series

Thread Code *
P - NPTF Pipe
S - SAE O'Ring
B - BSPP British Parallel
T - BSPT British Taper
M - Metric ISO 6149
(See Port Chart for Standard Sizes)

D05 - Down Side Ported

Application:

Subplate used for mounting directional valve with NFPA D05 Interface.

A, B, PR & TK ports on bottom surface.

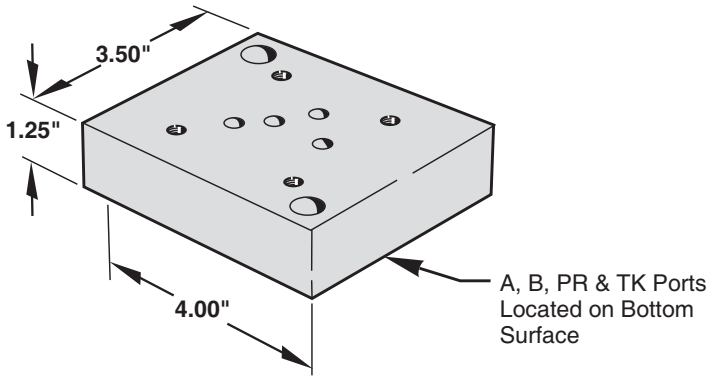

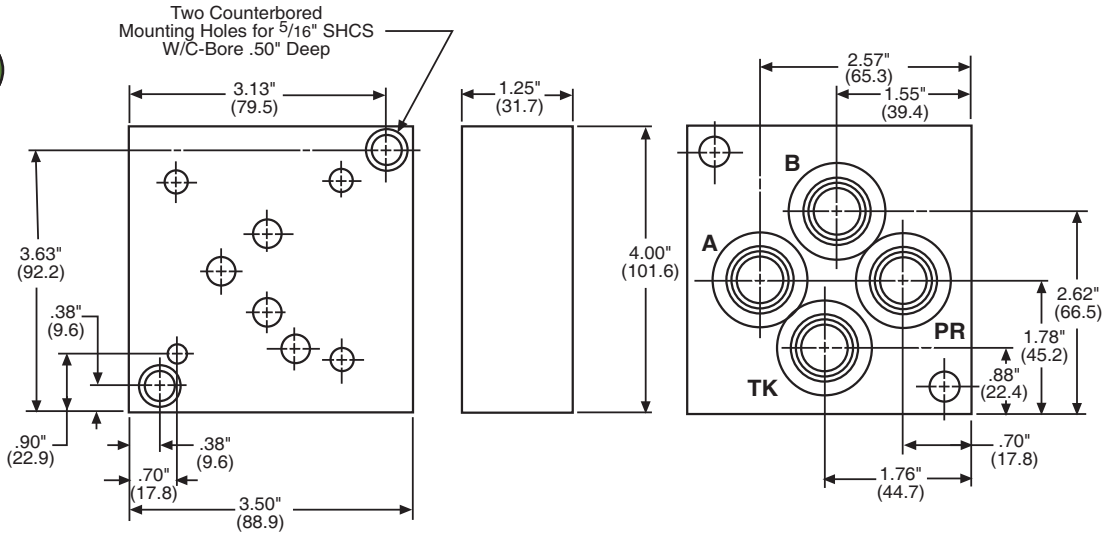

Thread Code *	PR, TK, A & B
P6	3/8" NPT
S6	#6 SAE
B6	3/8" BSPP
T6	3/8" BSPT
M6	M14 x 1.5
P8	1/2" NPT
S8	#8 SAE
B8	1/2" BSPP
T8	1/2" BSPT
M8	M18 x 1.5

MAGNALOY D05 SUPER SAVER SUBPLATE PART NUMBER BREAKDOWN

S P - A 0 5 P 6- 1 / D Z

Product Code
SP - Subplate

Material Code
A - Aluminum
S - Ductile/Steel

NFPA Pattern Code
05 - D05

Options
DZ - Down Side Porting - All 4 Ports on Bottom & No Relief Cavity (Super Saver-DZ)

Design Series

Thread Code *
P - NPTF Pipe
S - SAE O'Ring
B - BSPP British Parallel
T - BSPT British Taper
M - Metric ISO 6149
(See Port Chart for Standard Sizes)

magnaloy coupling company *501 Commerce Drive Alpena, MI 49707* ***989 356-2186***
A Division of Douville Johnston Corporation *Fax: 989 354-4190* *http://www.magnaloy.com*

D03 - Side Ported

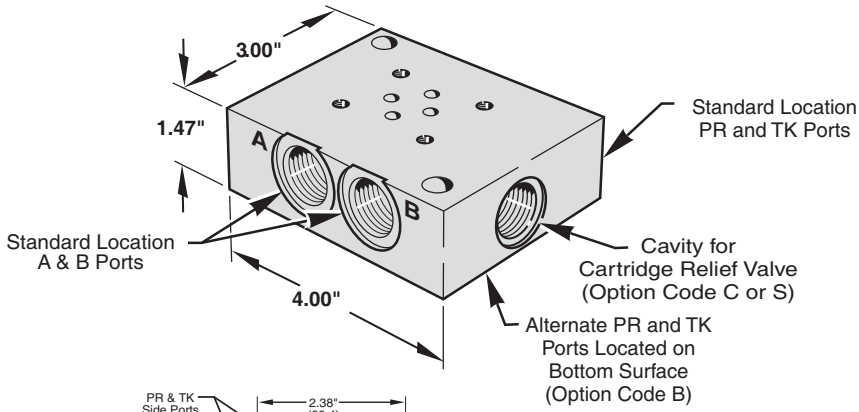

Application:

Subplate used for mounting directional valve with NFPA D03 Interface.

A & B ports on a common side, PR & TK ports on opposite side.

Optional features include cartridge relief valve cavity with the tank and pressure connections on the bottom surface to allow plumbing directly through the reservoir top.

Note:

Part Number includes the subplate only. Order relief valve cartridge separately.

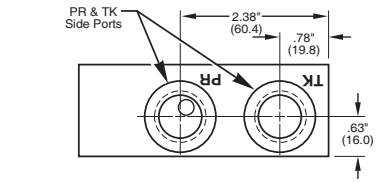

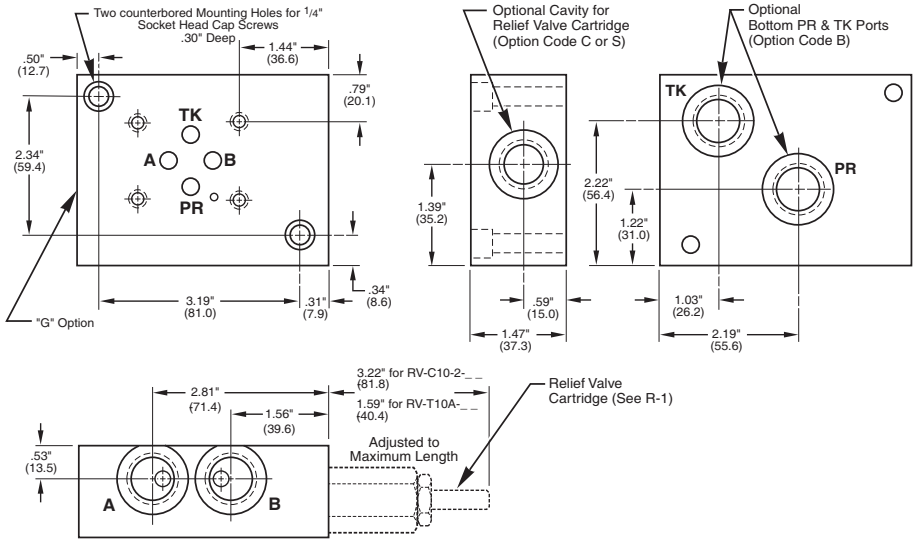

*

Thread Code	PR, TK, A & B
P6	3/8" NPT
S6	#6 SAE
B6	3/8" BSPP
T6	3/8" BSPT
M6	M14 x 1.5
P8	1/2" NPT
S8	#8 SAE
B8	1/2" BSPP
T8	1/2" BSPT
M8	M18 x 1.5

MAGNALOY D03 SUBPLATE PART NUMBER BREAKDOWN

S P - A 0 3 P 6 - 1 / B Z

Product Code
SP - Subplate

Material Code
A - Aluminum
S - Ductile/Steel

NFPA Pattern Code
03 - D03

Thread Code
P - NPTF Pipe
S - SAE O'Ring
B - BSPP British Parallel
T - BSPT British Taper
M - Metric ISO 6149
(See Port Chart for Standard Sizes)

Design Series

Options
Z - No Relief Cavity
B - Bottom PR-TK Ports (W/Side PR & TK)
C - Relief Valve Cavity C-10-2
G - Gauge Port #4 SAE or 1/4 NPTF
S - Relief Valve Cavity Sun T-10A
H - Hard Metric Threading (See Note 2, page 34)
M - Soft Metric Threading (See Note 3, page 34)
Note: For more than two combined options, consult factory.

D05 - Side Ported

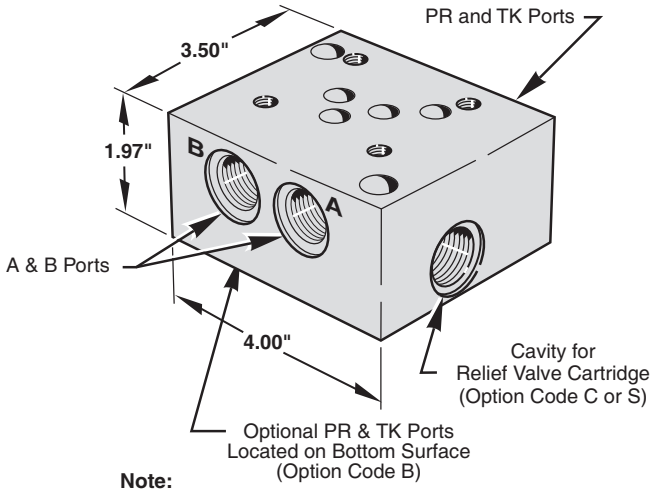

Note:
Part no. includes the subplate only. Order relief valve cartridge separately.

Application:

Subplate used for mounting directional valve with NFPA D05 Interface.

A & B ports on a common side, PR & TK ports on opposite side.

Optional features include cartridge relief valve cavity with the tank and pressure
connections on the bottom surface to allow plumbing directly through the reservoir top.

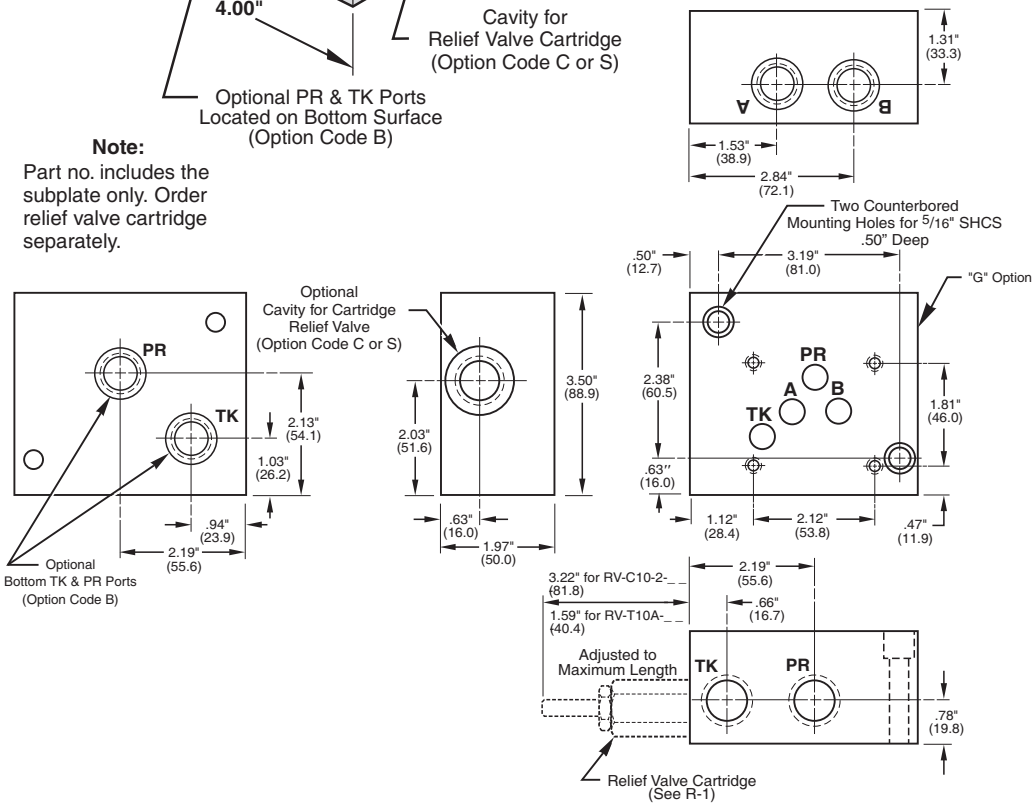

Thread Code	PR, TK, A & B *
P6	3/8" NPT
S6	#6 SAE
B6	3/8" BSPP
T6	3/8" BSPT
M6	M14 x 1.5
P8	1/2" NPT
S8	#8 SAE
B8	1/2" BSPP
T8	1/2" BSPT
M8	M18 x 1.5

MAGNALOY D05 SUBPLATE PART NUMBER BREAKDOWN

S P - A 0 5 P 6 - 1 / B Z

Product Code
SP - Subplate

Material Code
A - Aluminum
S - Ductile/Steel

NFPA Pattern Code
05 - D05

Thread Code
P - NPTF Pipe
S - SAE O'Ring
B - BSPP British Parallel
T - BSPT British Taper
M - Metric ISO 6149
(See Port Chart for Standard Sizes)

Design Series

Options
Z - No Relief Cavity
B - Bottom PR-TK Ports (W/Side PR & TK)
C - Relief Valve Cavity C-10-2
G - Gauge Port #4 SAE or 1/4 NPTF
S - Relief Valve Cavity Sun T-10A
H - Hard Metric Threading (See Note 2, page 34)
M - Soft Metric Threading (See Note 3, page 34)
Note: For more than two combined options, consult factory.

magnaloy coupling company 501 Commerce Drive Alpena, MI 49707 989 356-2186
A Division of Douville Johnston Corporation Fax: 989 354-4190 http://www.magnaloy.com

D05 - High Flow Side Ported

Application:
Subplate used for mounting directional valve with NFPA D05 Interface.

A & B ports on a common side, PR & TK on opposite side.

Optional features include cartridge relief valve cavity, gauge port and tank and pressure connections on the bottom surface to allow plumbing directly through a reservoir top.

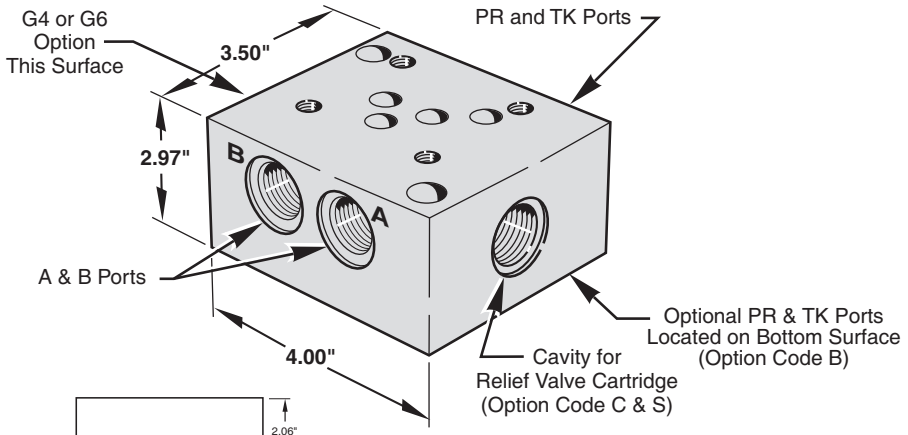

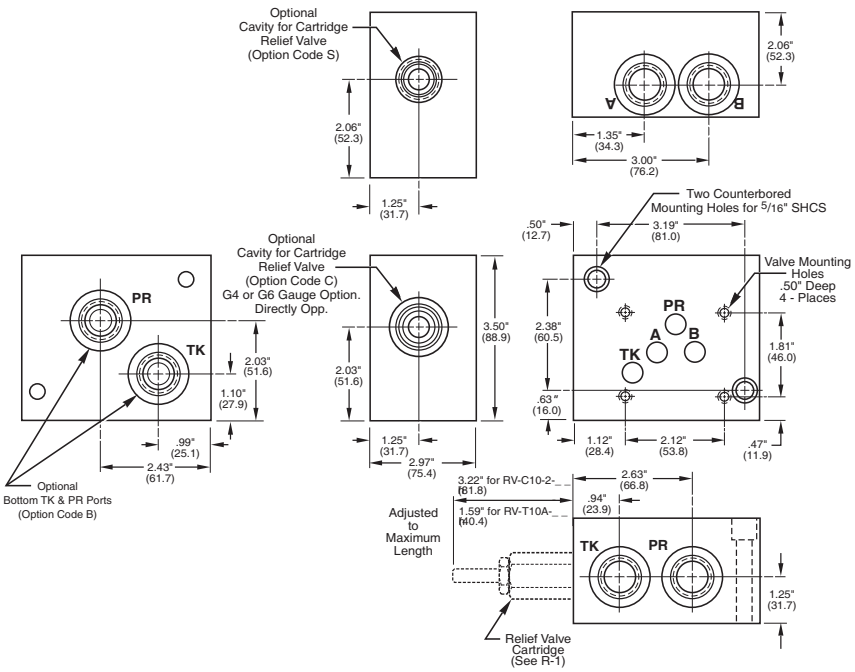

Thread Code	PR, TK, A & B	Valve Mounting
P12	3/4" NPT	1/4-20 UNC
S12	#12 SAE	1/4-20 UNC
B12	3/4" BSPP	M6 - 1.0
T12	3/4" BSPT	M6 - 1.0
M12	M27 x 2.0	M6 - 1.0

Note:
Part no. includes the subplate only. Order relief valve cartridge separately.

3

MAGNALOY D05 SUBPLATE PART NUMBER BREAKDOWN

S P - A H 0 5 P 1 2 - 1 / B Z

Product Code
SP - Subplate

Material Code
A - Aluminum
S - Ductile/Steel

NFPA Pattern Code
H05 - High Flow D05

Thread Code
P12 - NPTF Pipe
S12 - SAE O'Ring
B12 - BSPP British Parallel
T12 - BSPT British Taper
M12 - Metric ISO 6149
(See Port Chart for Standard Sizes)

Design Series

Options
Z - No Relief Cavity
B - Bottom PR-TK Ports (W/Side PR & TK Ports)
C - Relief Valve Cavity C-10-2
G4 - Gauge Port #4 SAE or 1/4 NPTF
G6 - Gauge Port #6 SAE
S - Relief Valve Cavity Sun T-10A
M - Soft Metric Threading (See Note 3, page 34)
Note: For more than two combined options, consult factory.

Also available in Extra High Flow Design and
D05E Alt A or D05H Alt B pattern - Consult Factory

D08 - Side Ported

Application:
Side ported subplate used for mounting directional valves with NFPA D08 Interface. Features include A, B and pilot pressure ports on a common side with PR, TK and pilot drain ports on the opposite side.

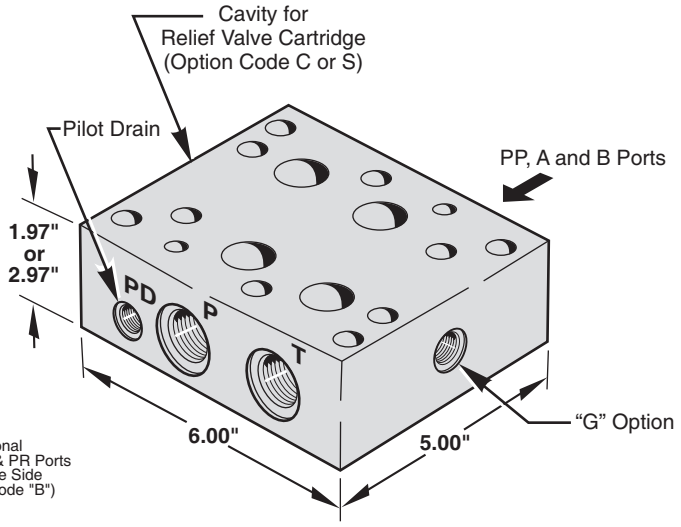

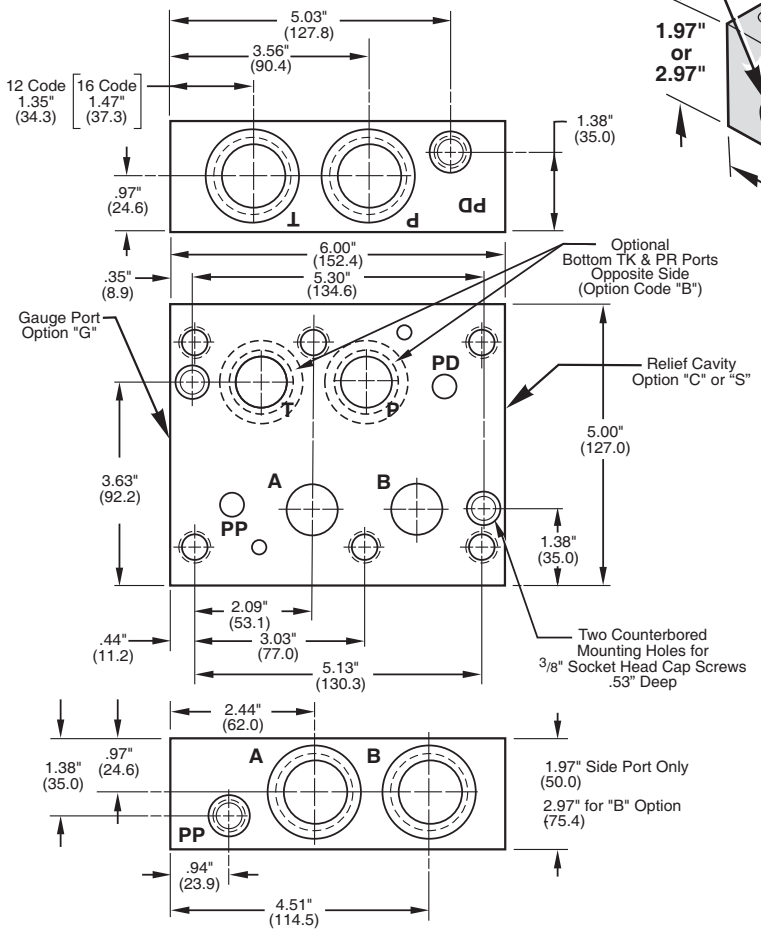

Thread Code	PR, TK, A & B	PD & PP
P12	3/4" NPT	1/4" NPT
S12	#12 SAE	#6 SAE
B12	3/4" BSPP	1/4" BSPP
T12	3/4" BSPT	1/4" BSPT
M12	M27 x 2.0	M12 x 1.5
P16	1" NPT	1/4" NPT
S16	#16 SAE	#6 SAE
B16	1" BSPP	1/4" BSPP
T16	1" BSPT	1/4" BSPT
M16	M33 x 2.0	M12 x 1.5

MAGNALOY D08 SUBPLATE PART NUMBER BREAKDOWN

S P - A 0 8 P 1 2 - 1 / B Z

Product Code
SP - Subplate

Material Code
A - Aluminum
S - Ductile/Steel

NFPA Pattern Code
08 - D08

Thread Code
P - NPTF Pipe
S - SAE O'Ring
B - BSPP British Parallel
T - BSPT British Taper
M - Metric ISO 6149
(See Port Chart for Standard Sizes)

Design Series

Options
Z - No Relief Cavity
B - Bottom PR-TK Ports (W/Side PR & TK Ports)
C - Relief Valve Cavity C-10-2
G - Gauge Port #4 SAE or 1/4 NPTF
G6 - Gauge Port #6 SAE
S - Relief Valve Cavity Sun T-3A
H - Hard Metric Threading (See Note 2, page 34)
M - Soft Metric Threading (See Note 3, page 34)
Note: For more than two combined options, consult factory.

magnaloy coupling company 501 Commerce Drive Alpena, MI 49707 989 356-2186
A Division of Douville Johnston Corporation Fax: 989 354-4190 http://www.magnaloy.com

INDEX		Part Number	
For NFPA D03 Valve Stations		**Aluminum**	**Ductile/Steel**
76	All Ports Blocked	CP-ASP03_-1/Z	CP-SSP03_-1/Z
76	All Ports Blocked, Gauge Ports Provided	CP-ASP03_-1/G	CP-SSP03_-1/G
77	PR & TK Ports Connected for Series Circuit	CP-ASS03_-1/Z	CP-SSS03_-1/Z
For NFPA D05 Valve Stations		**Aluminum**	**Ductile/Steel**
78	All Ports Blocked	CP-ASP05_-1/Z	CP-SSP05_-1/Z
78	All Ports Blocked, Gauge Ports Provided	CP-ASP05_-1/G	CP-SSP05_-1/G
79	PR & TK Ports Connected for Series Circuit	CP-ASS05_-1/Z	CP-SSS05_-1/Z
For NFPA D08 Valve Stations		**Aluminum**	**Ductile/Steel**
80	All Ports Blocked	CP-ASP08_-1/Z	CP-SSP08_-1/Z
80	All Ports Blocked, Gauge Ports Provided	CP-ASP08_-1/G	CP-SSP08_-1/G
81	PR & TK Ports Connected for Series Circuit	CP-ASS08_-1/Z	CP-SSS08_-1/Z

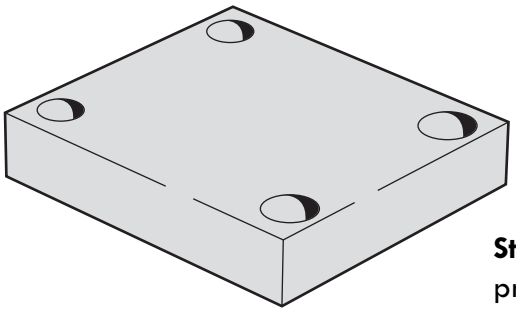

Standard Cover Plate - includes o'ring pockets on the bottom surface to provide o'ring sealing of the NFPA valve pattern. Mounting provisions include four (4) holes (6 on D08 cover plate) on the top surface of the cover plate. Mounting hardware, locating pins (w/D03 and D08 only) and viton o'ring are provided.

Options:

G - Gauge Ports - addition of two (2) gauge ports to the top surface of the cover plate to provide monitoring of the pressure and tank ports.

MAGNALOY COVER PLATE PART NUMBER BREAKDOWN

***C P - A S P 0 3 E - 1 / G**

Product Code
CP - Cover Plate

Material Code
A - Aluminum
S - Ductile/Steel

Circuit Code
SP - Parallel Flow
SS - Series Flow
CO - Crossover Flow
(P to A, B to T)

NFPA Pattern Code
03 - D03
05 - D05
08 - D08

Mounting Code
E - English
M - Metric

Design Series

Options
Z - No Options
G - Gauge Ports for PR & TK

**See following Cover Plate Pages for specific Magnaloy standard configurations with options.*

D03 Cover Plate, Parallel Blank Off

Application:

Seals and isolates all valve ports when used as substitute for directional valve. Gauge Port option provides pressure and tank line signal ports.

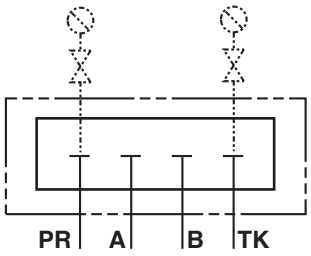

Circuit

Note: (With Gauge Option)
Level seal pipe plugs are furnished to plug unused gauge ports.

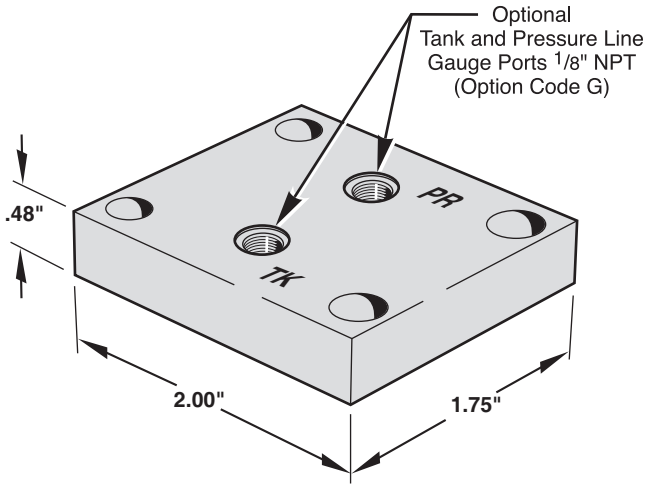

Supplied Hardware

Mounting Bolts — (4) M5-.80 x 22mm S.H.C.S. (M - Mtg.Code)
Mounting Bolts — (4) 10-24 x 7/8″ S.H.C.S. (E - Mtg.Code)
O-Rings — Viton (4) 1/2″ OD x 3/8″ ID x 1/16″ CS
Pipe Plugs — (2) 1/8″ NPT Level Seal (See note above)
Locating Pin — (1) 1/8″ x 3/8″ Roll Pin

Part Numbers:

Aluminum	Ductile/Steel
CP-ASP03_-1/Z	CP-SSP03_-1/Z
CP-ASP03_-1/G	CP-SSP03_-1/G

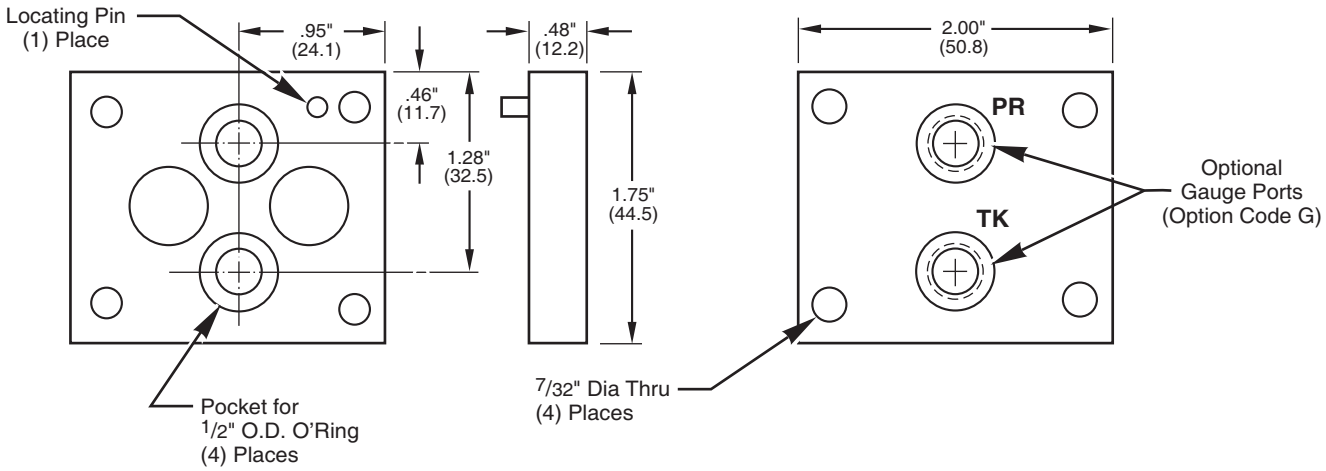

MAGNALOY D03 COVER PLATE PART NUMBER BREAKDOWN

C P - A S P 0 3 E - 1 / G

Product Code
CP - Cover Plate

Material Code
A - Aluminum
S - Ductile/Steel

Circuit Code
SP - Parallel Flow

NFPA Pattern Code
03 - D03

Mounting Code
E - English
M - Metric

Design Series

Options
Z - No Options
G - Gauge Ports for PR & TK - 1/8 NPTF

magnaloy coupling company 501 Commerce Drive Alpena, MI 49707 989 356-2186
A Division of Douville Johnston Corporation Fax: 989 354-4190 http://www.magnaloy.com

D03 Cover Plate, Series Blank Off

Application:

Seals all valve ports and provides the pressure port common to tank port when used as a flush out plate or as a substitute for directional valve in a series circuit.

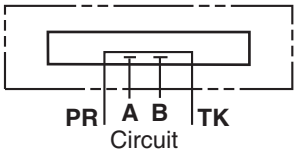

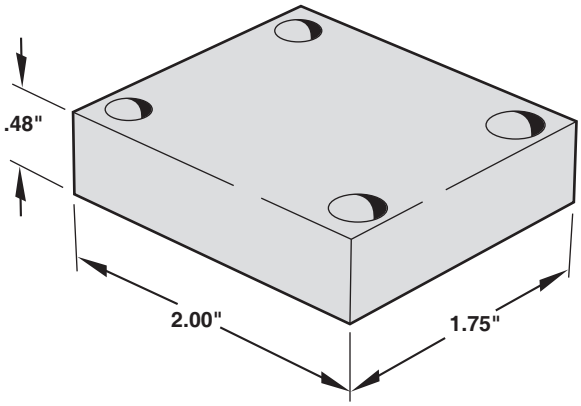

Supplied Hardware

Mounting Bolts — (4) M5-.80 x 22mm S.H.C.S. (M - Mtg.Code)
Mounting Bolts — (4) 10-24 x 7/8" S.H.C.S. (E - Mtg.Code)
O-Rings — Viton (4) 1/2" OD x 3/8" ID x 1/16" CS
Locating Pin — (1) 1/8" Dia x 3/8" Roll Pin

Part Numbers:	
Aluminum	**Ductile/Steel**
CP-ASS03_-1/Z	CP-SSS03_-1/Z

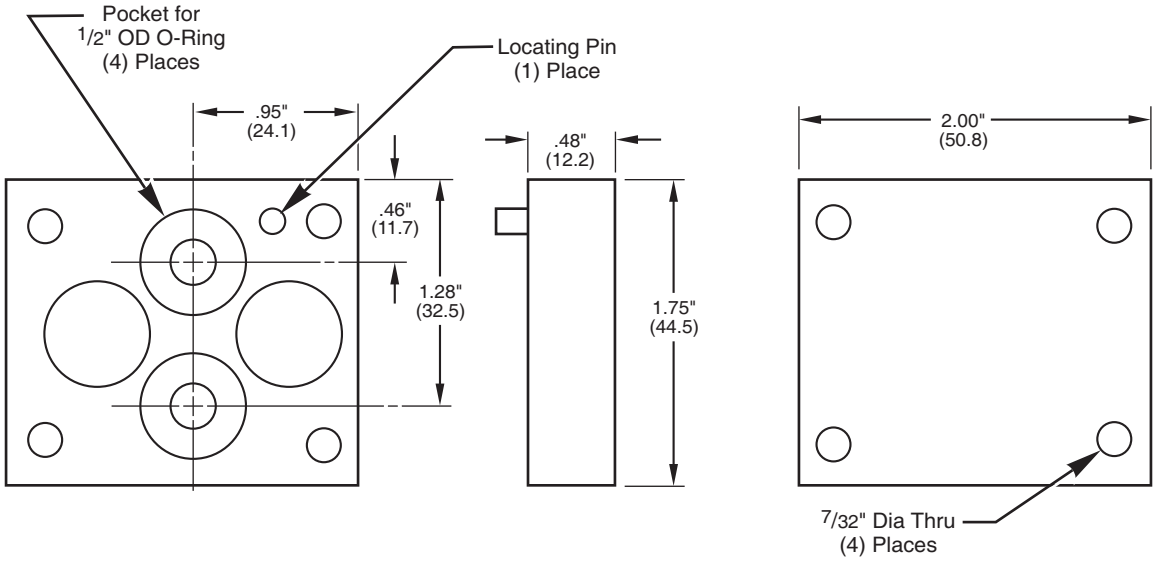

MAGNALOY D03 COVER PLATE PART NUMBER BREAKDOWN

C P - A S S 0 3 E - 1 / Z

- Product Code: CP - Cover Plate
- Material Code: A - Aluminum; S - Ductile/Steel
- Circuit Code: SS - Series Flow
- NFPA Pattern Code: 03 - D03
- Mounting Code: E - English; M - Metric
- Design Series
- Options: Z - No Options

D05 Cover Plate, Parallel Blank Off

Application:

Seals and isolates all valve ports when used as substitute for directional valve. Gauge Port option provides pressure and tank line signal ports.

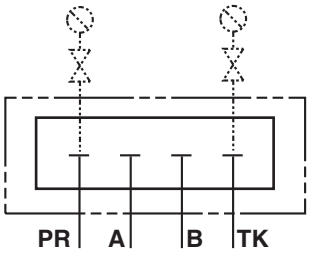

Circuit

Note: (With Gauge Option)
Level seal pipe plugs are furnished to plug unused gauge ports.

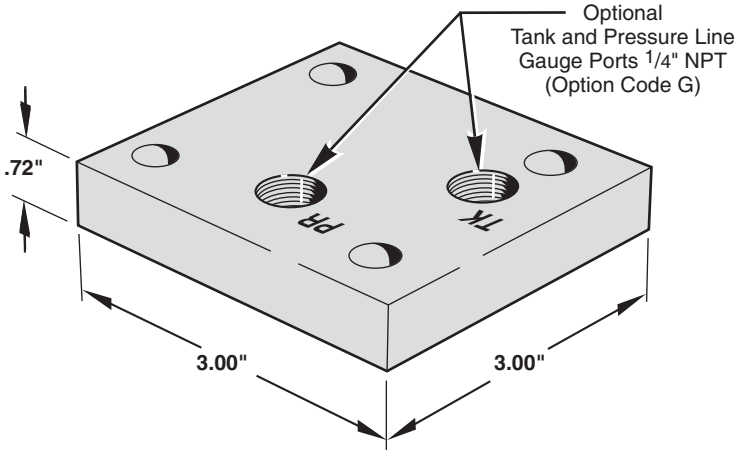

Supplied Hardware

Mounting Bolts — (4) M6-1.0 x 32mm S.H.C.S. (M - Mtg.Code)
Mounting Bolts — (4) 1/4-20 x 1 1/4" S.H.C.S. (E - Mtg.Code)
O-Rings — Viton (5) 5/8" OD x 1/2" ID x 1/16" CS
Pipe Plugs — (2) 1/4" NPT Level Seal (See note above)

Part Numbers:	
Aluminum	**Ductile/Steel**
CP-ASP05_-1/Z	CP-SSP05_-1/Z
CP-ASP05_-1/G	CP-SSP05_-1/G

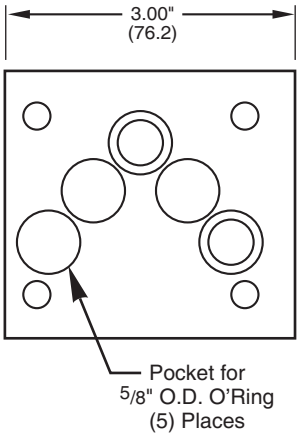

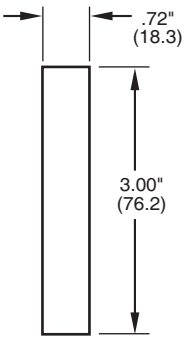

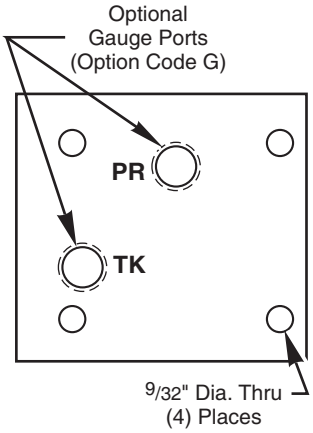

MAGNALOY D05 COVER PLATE PART NUMBER BREAKDOWN

C P - A S P 0 5 E - 1 / G

Product Code
CP - Cover Plate

Material Code
A - Aluminum
S - Ductile/Steel

Circuit Code
SP - Parallel Flow

NFPA Pattern Code
05 - D05

Mounting Code
E - English
M - Metric

Design Series

Options
Z - No Options
G - Gauge Ports for PR & TK - 1/4 NPTF

magnaloy coupling company 501 Commerce Drive Alpena, MI 49707 989 356-2186
A Division of Douville Johnston Corporation Fax: 989 354-4190 http://www.magnaloy.com

D05 Cover Plate, Series Blank Off

Application:

Seals all valve ports and provides the pressure port common to tank port when used as a flush out plate or as a substitute for directional valve in a series circuit.

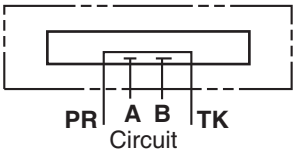

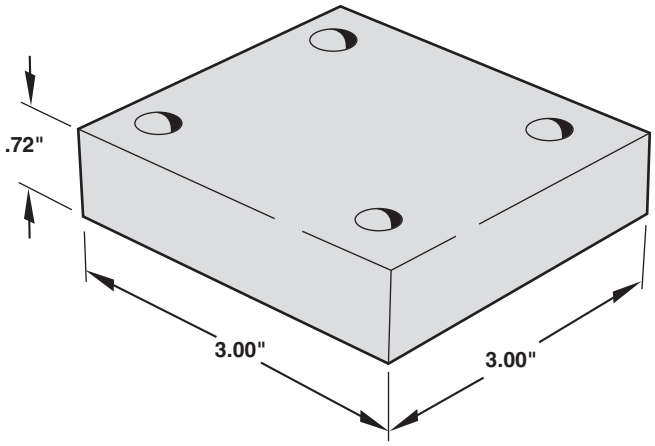

Supplied Hardware

Mounting Bolts — (4) M6-1.0 x 32mm S.H.C.S. (M - Mtg.Code)
Mounting Bolts — (4) 1/4-20 x 11/4" S.H.C.S. (E - Mtg.Code)
O-Rings — Viton (5) 5/8" OD x 1/2" ID x 1/16" CS

Part Numbers:	
Aluminum	**Ductile/Steel**
CP-ASS05_-1/Z	CP-SSS05_-1/Z

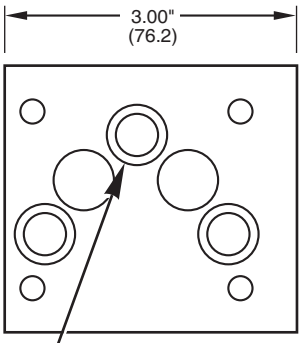

Pocket for
5/8" O.D. O'Ring
(5) Places

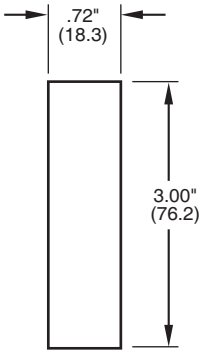

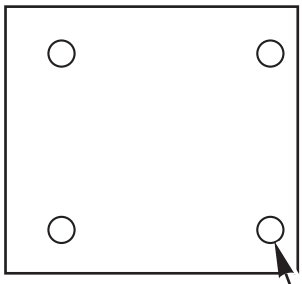

9/32" Dia. Thru
(4) Places

MAGNALOY D05 COVER PLATE PART NUMBER BREAKDOWN

C P - A S S 0 5 E - 1 / Z

Product Code
CP - Cover Plate

Material Code
A - Aluminum
S - Ductile/Steel

Circuit Code
SS - Series Flow

NFPA Pattern Code
05 - D05

Mounting Code
E - English
M - Metric

Design Series

Options
Z - No Options

D08 Cover Plate, Parallel Blank Off

Application:

Seals and isolates all valve ports when used as substitute for directional valve. Gauge Port option provides pressure and tank line signal ports.

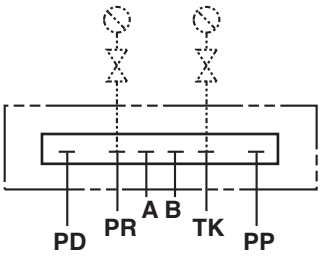

Circuit

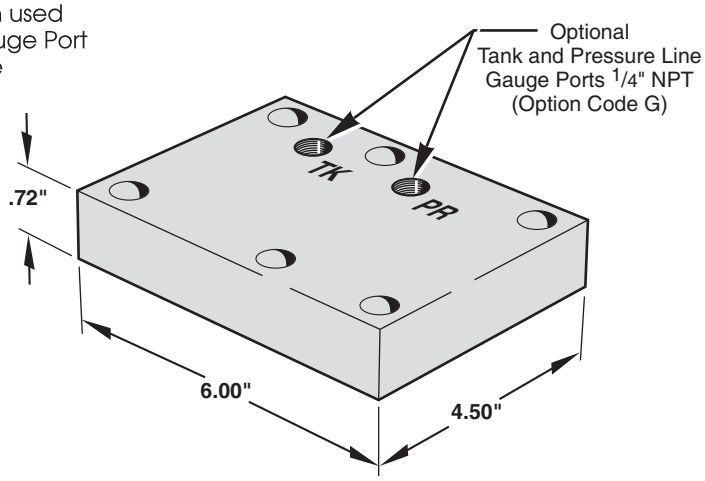

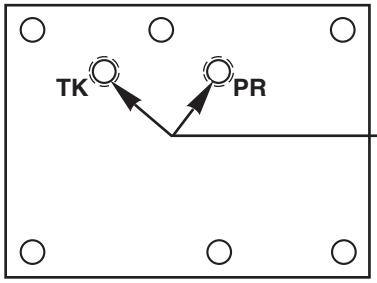

Optional
Gauge Ports
(Option Code G)

Part Numbers:	
Aluminum	**Ductile/Steel**
CP-ASP08_-1/Z	CP-SSP08_-1/Z
CP-ASP08_-1/G	CP-SSP08_-1/G

Supplied Hardware

Mounting Bolts — (6) M12-1.75 x 38mm S.H.C.S. (M - Mtg.Code)
Mounting Bolts — (6) 1/2-13 x 1 1/2" S.H.C.S. (E - Mtg.Code)
O-Rings — Viton (3) 3/4" OD x 1/2" ID x 1/8" CS
O-Rings — Viton (4) 1 5/16" OD x 1 1/16" ID x 1/8" CS
Locating Pin — (2) 1/4" Dia. x 1/2" Roll Pin
Pipe Plugs — (2) 1/4" NPT Level Seal

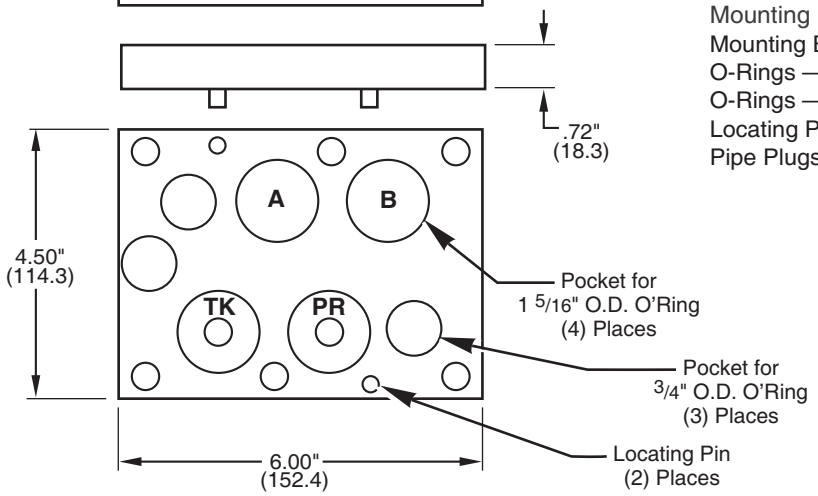

Note: (With Gauge Option) Level Seal Pipe Plugs are furnished to plug unused gauge ports.

MAGNALOY D08 COVER PLATE PART NUMBER BREAKDOWN

C P - A S P 0 8 E - 1 / G

Product Code
CP - Cover Plate

Material Code
A - Aluminum
S - Ductile/Steel

Circuit Code
SP - Parallel Flow

NFPA Pattern Code
08 - D08

Mounting Code
E - English
M - Metric

Design Series

Options
Z - No Options
G - Gauge Ports for PR & TK - 1/4 NPTF

magnaloy coupling company 501 Commerce Drive Alpena, MI 49707 989 356-2186
A Division of Douville Johnston Corporation Fax: 989 354-4190 http://www.magnaloy.com

D08 Cover Plate, Series Blank Off

Application:

Seals all valve ports and provides the pressure port common to tank port when used as a flush out plate or as a substitute for directional valve in a series circuit.

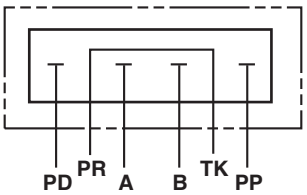

Circuit

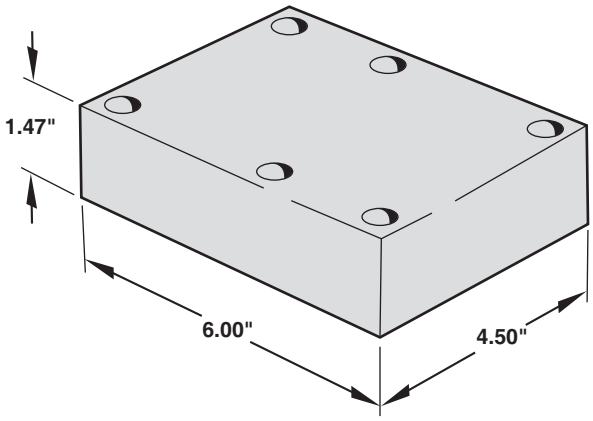

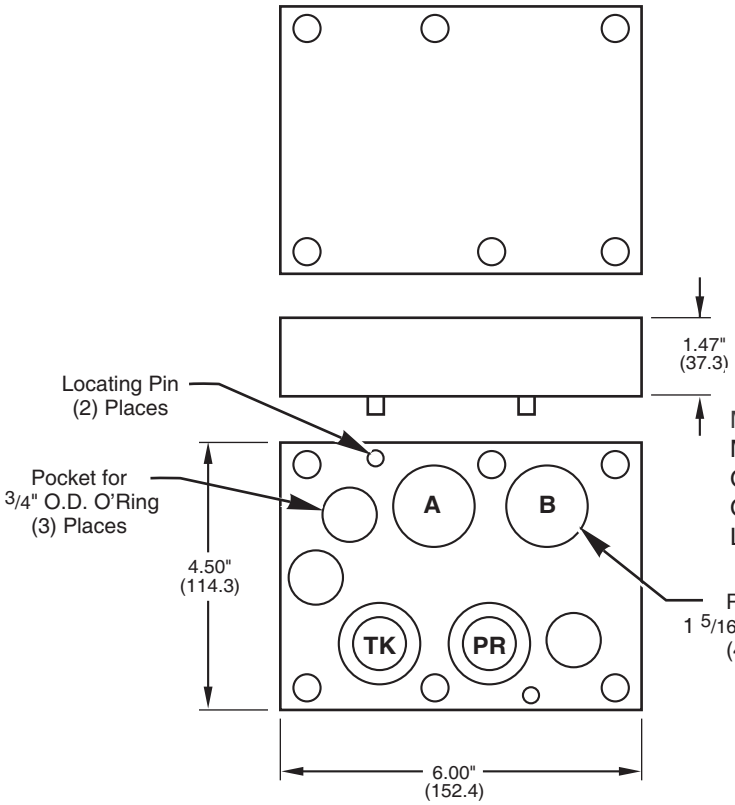

Part Numbers:	
Aluminum	**Ductile/Steel**
CP-ASS08_-1/Z	CP-SSS08_-1/Z

Supplied Hardware

Mounting Bolts — (6) M12-1.75 x 57mm S.H.C.S. (M - Mtg.Code)
Mounting Bolts — (6) 1/2-13 x 2 1/4" S.H.C.S. (E - Mtg.Code)
O-Rings — Viton (3) 3/4" OD x 1/2" ID x 1/8" CS
O-Rings — Viton (4) 1 5/16" OD x 1 1/16" ID x 1/8" CS
Locating Pin — (2) 1/4" Dia. x 1/2" Roll Pin

MAGNALOY D08 COVER PLATE PART NUMBER BREAKDOWN

C P - A S S 0 8 E - 1 / Z

- Product Code: CP - Cover Plate
- Material Code: A - Aluminum; S - Ductile/Steel
- Circuit Code: SS - Series Flow
- NFPA Pattern Code: 08 - D08
- Mounting Code: E - English; M - Metric
- Design Series
- Options: Z - No Options

magnaloy coupling company 501 Commerce Drive Alpena, MI 49707 989 356-2186
A Division of Douville Johnston Corporation Fax: 989 354-4190 http://www.magnaloy.com

INDEX		Part Number	
Adaptors For Mounting Smaller Valve on Larger Valve Station		**Aluminum**	**Ductile/Steel**
83	NFPA D03 Valve on NFPA D05 Station	VA-A03/05-_BA-0	VA-S03/05-_BA-0
84	NFPA D05 Valve on NFPA D08 Station	VA-A05/08-_BA-0	VA-S05/08-_BA-0
85	NFPA 2F06 Valve on NFPA 2F07 Station	VA-AF6/F7-_AA-0	VA-SF6/F7-_AA-0
86	NFPA P-08 Valve on NFPA P-10 Station	VA-AP8/P0-_AA-0	VA-SP8/P0-_AA-0

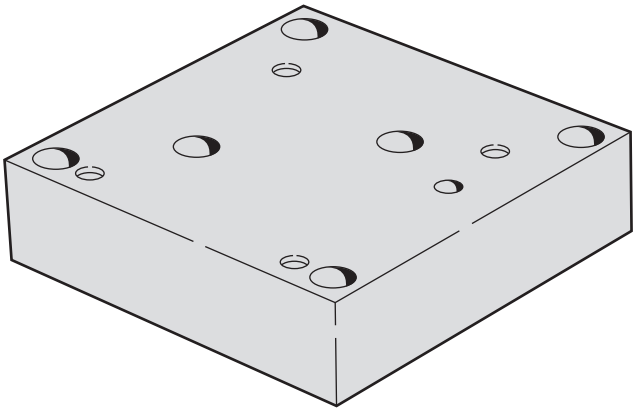

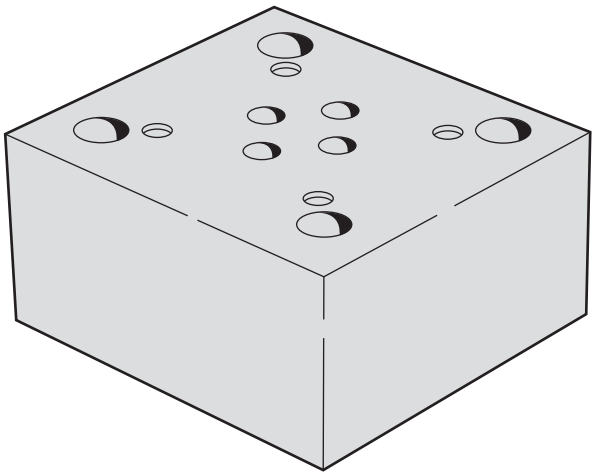

MAGNALOY VALVE ADAPTOR PART NUMBER BREAKDOWN

***V A - A 0 5 / 0 8 - E B A - 0**

Product Code
VA - Valve Adaptor

Material Code
A - Aluminum
S - Ductile/Steel

Valve Pattern Code
03 - D03
05 - D05
08 - D08
F6 - 2F06
P8 - P08

Manifold Pattern Code
05 - D05
08 - D08
F7 - 2F07
P0 - P10

Valve Mounting Thread Code
E - English
M - Metric

Valve - Manifold Port Orientation Code
AA - A_v common to A_m, B_v common to B_m
BA - B_v common to A_m, A_v common to B_m

Design Series

* *See following Valve Adaptor Pages for specific Magnaloy standard configurations with options.*

magnaloy coupling company *501 Commerce Drive Alpena, MI 49707* ***989 356-2186***
A Division of Douville Johnston Corporation *Fax: 989 354-4190* *http://www.magnaloy.com*

Valve Adaptor - D03 to D05

Application:

Adapts valve with NFPA DO3 pattern to NFPA DO5 pattern with either all ports common (AA) or the D03 "A" & "B" ports reversed to connect to the D05 "A" & "B" ports (BA)

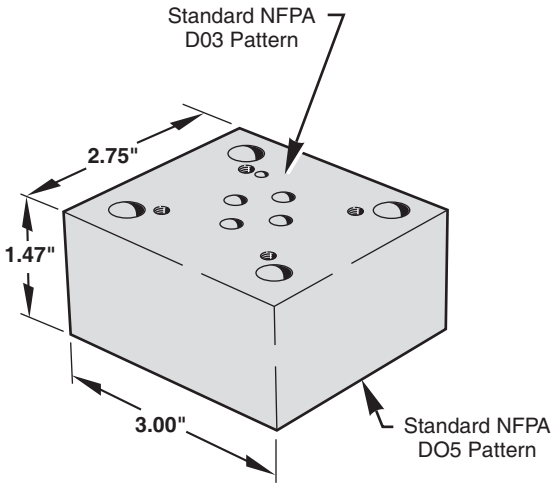

Supplied Hardware

Mounting Bolts — (4) M6-1.0 x 38mm S.H.C.S. (M - Mtg.Code)
Mounting Bolts — (4) 1/4-20 x 1 1/2" S.H.C.S. (E - Mtg.Code)
O-Rings — Viton (5) 5/8" OD x 1/2" ID x 1/16" CS

Part Numbers:	
Aluminum	**Ductile/Steel**
VA-A03/05-_BA-0	VA-S03/05-_BA-0
VA-A03/05-_AA-0	VA-S03/05-_AA-0

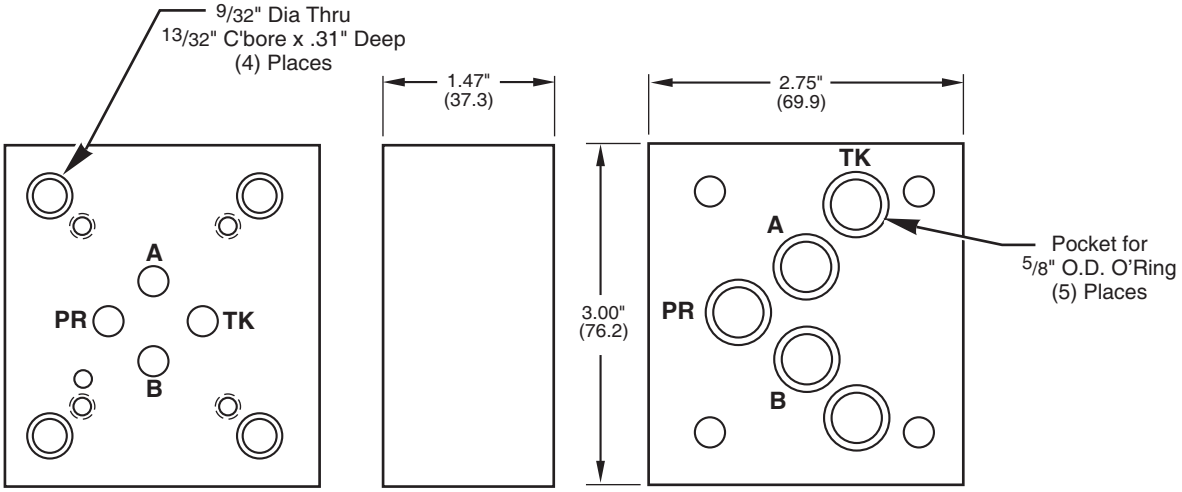

MAGNALOY VALVE ADAPTOR PART NUMBER BREAKDOWN

V A - A 0 3 / 0 5 - E B A - 0

Product Code
VA - Valve Adaptor

Material Code
A - Aluminum
S - Ductile/Steel

Valve Pattern Code
03 - D03

Manifold Pattern Code
05 - D05

Valve Mounting Thread Code
E - English
M - Metric

Valve - Manifold Port Orientation Code
AA - A_v common to A_m, B_v common to B_m
BA - B_v common to A_m, A_v common to B_m

Design Series

Valve Adaptor - D05 to D08

Application:

Adapts valve with NFPA DO5 pattern to NFPA DO8 pattern.

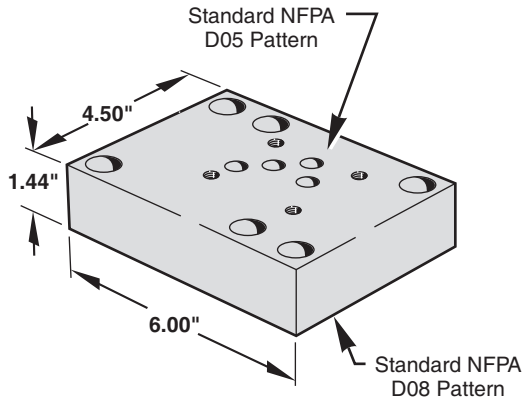

Supplied Hardware

Mounting Bolts — (6) M12-1.75 x 38mm S.H.C.S. (M - Mtg.Code)
Mounting Bolts — (6) 1/2-13 x 1 1/2" S.H.C.S. (E - Mtg.Code)
O-Rings — Viton (3) 3/4" OD x 1/2" ID
O-Rings — Viton (4) 1 5/16" OD x 1 1/16" ID
Locating Pin — (2) 1/4" x 1/2" Roll Pin

Part Numbers:	
Aluminum	**Ductile/Steel**
VA-A05/08-_AA-0	VA-S05/08-_AA-0

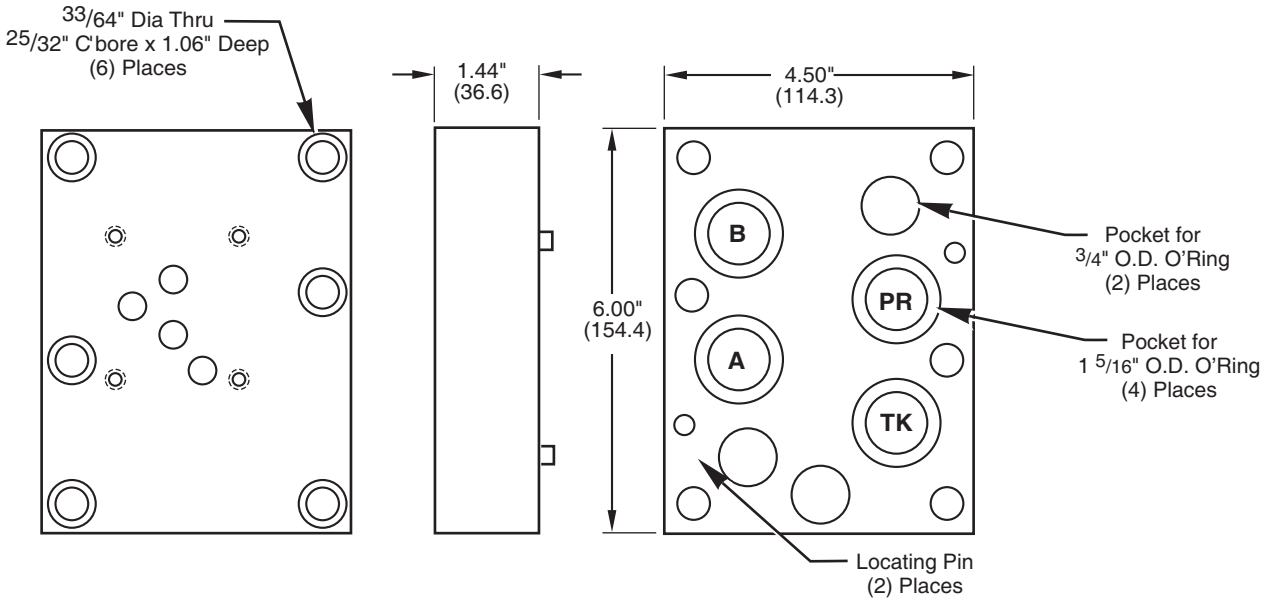

MAGNALOY VALVE ADAPTOR PART NUMBER BREAKDOWN

V A - A 0 5 / 0 8 - E A A - 0

Product Code
VA - Valve Adaptor

Material Code
A - Aluminum
S - Ductile/Steel

Valve Pattern Code
05 - D05

Manifold Pattern Code
08 - D08

Valve Mounting Thread Code
E - English
M - Metric

Valve - Manifold Port Orientation Code
AA - A_v common to A_m, B_v common to B_m

Design Series

magnaloy coupling company 501 Commerce Drive Alpena, MI 49707 989 356-2186
A Division of Douville Johnston Corporation Fax: 989 354-4190 http://www.magnaloy.com

Valve Adaptor - 2F06 to 2F07

Application:
Adapts valve with NFPA 2F06 pattern to NFPA 2F07 pattern.

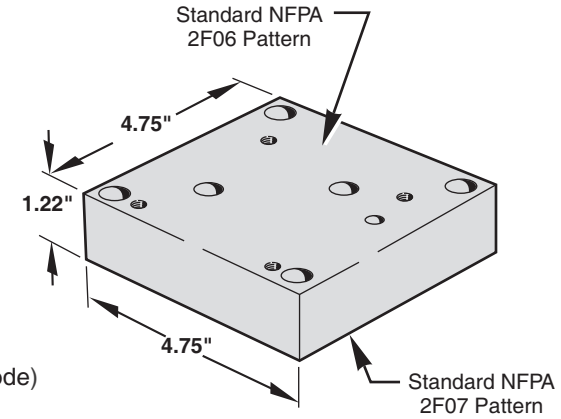

Supplied Hardware

Mounting Bolts — (4) M10-1.5 x 32mm S.H.C.S. (M - Mtg.Code)
Mounting Bolts — (4) 3/8-16 x 1 1/4" S.H.C.S. (E - Mtg.Code)
O-Rings — Viton (1) 1 1/2" OD x 1 1/4" ID x 1/8" CS
O-Rings — Viton (1) 1 3/4" OD x 1 1/2" ID x 1/8" CS
Locating Pin — (1) 1/4" Dia. x 1/2" Roll Pin

Part Numbers:	
Aluminum	**Ductile/Steel**
VA-AF6/F7-_AA-0	VA-SF6/F7-_AA-0

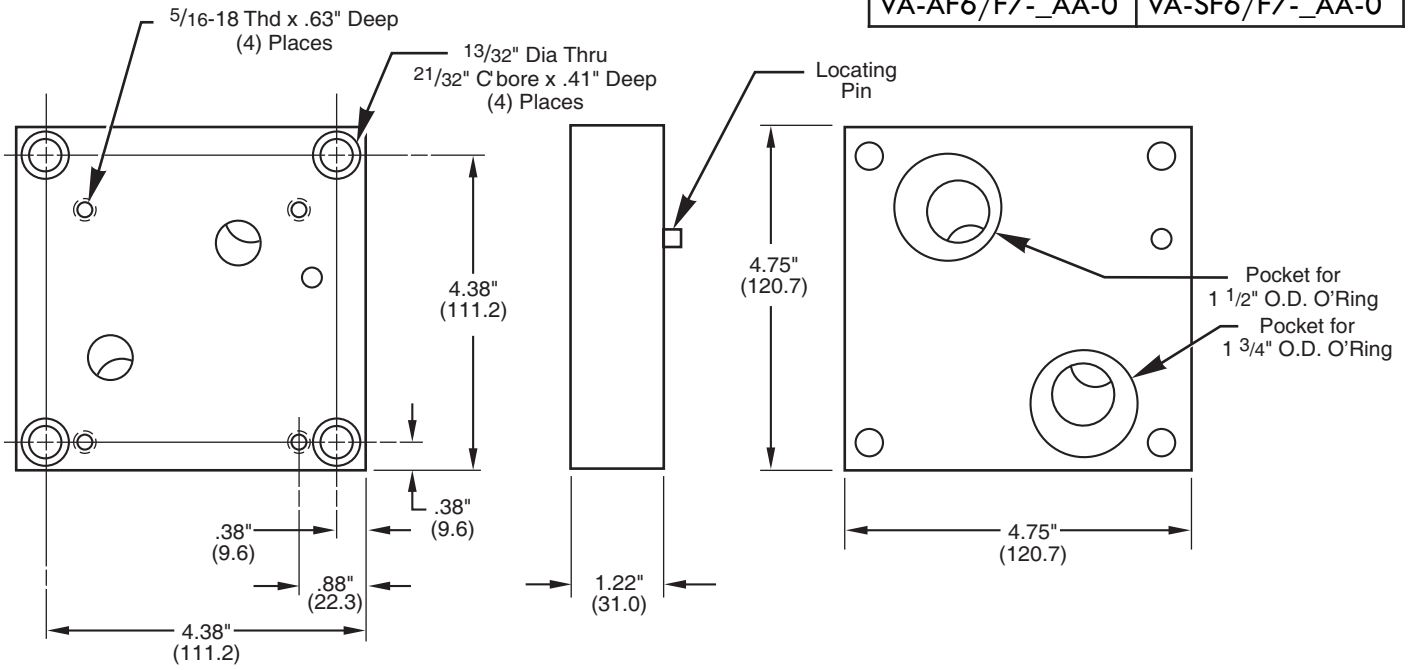

MAGNALOY VALVE ADAPTOR PART NUMBER BREAKDOWN

V A - A F 6 / F 7 - E A A - 0

- Product Code: VA - Valve Adaptor
- Material Code: A - Aluminum; S - Ductile/Steel
- Valve Pattern Code: F6 - 2F06
- Manifold Pattern Code: F7 - 2F07
- Valve Mounting Thread Code: E - English; M - Metric
- Valve - Manifold Port Orientation Code: AA - A_v common to A_m, B_v common to B_m
- Design Series

magnaloy coupling company 501 Commerce Drive Alpena, MI 49707 989 356-2186
A Division of Douville Johnston Corporation Fax: 989 354-4190 http://www.magnaloy.com

Valve Adaptor - P08 to P10

Application:

Adapts a 3/4" pressure control valve (NFPA P08) to a 1 1/4" pressure control valve pattern (P10).

Note:

This adaptor is for use with internally drained valves. A passage is provided for external pilot pressure.

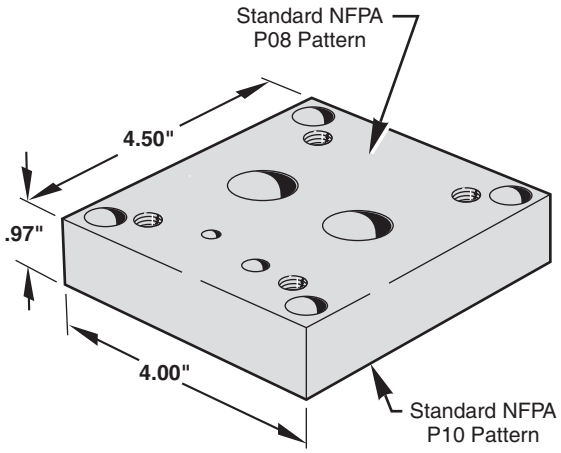

Supplied Hardware

Mounting Bolts — (4) M10-1.5 x 32mm S.H.C.S. (M - Mtg.Code)
Mounting Bolts — (4) 3/8-16 x 1 1/4" S.H.C.S. (E - Mtg.Code)
O-Rings — Viton (2) 7/16" OD x 5/16" ID x 1/16" CS
O-Rings — Viton (2) 1 5/8" OD x 1 3/8" ID x 1/8" CS
Locating Pin — 1/4" Dia. x 1/2" Roll Pin

Part Numbers:

Aluminum	Ductile/Steel
VA-AP8/P0-_AA-0	VA-SP8/P0-_AA-0

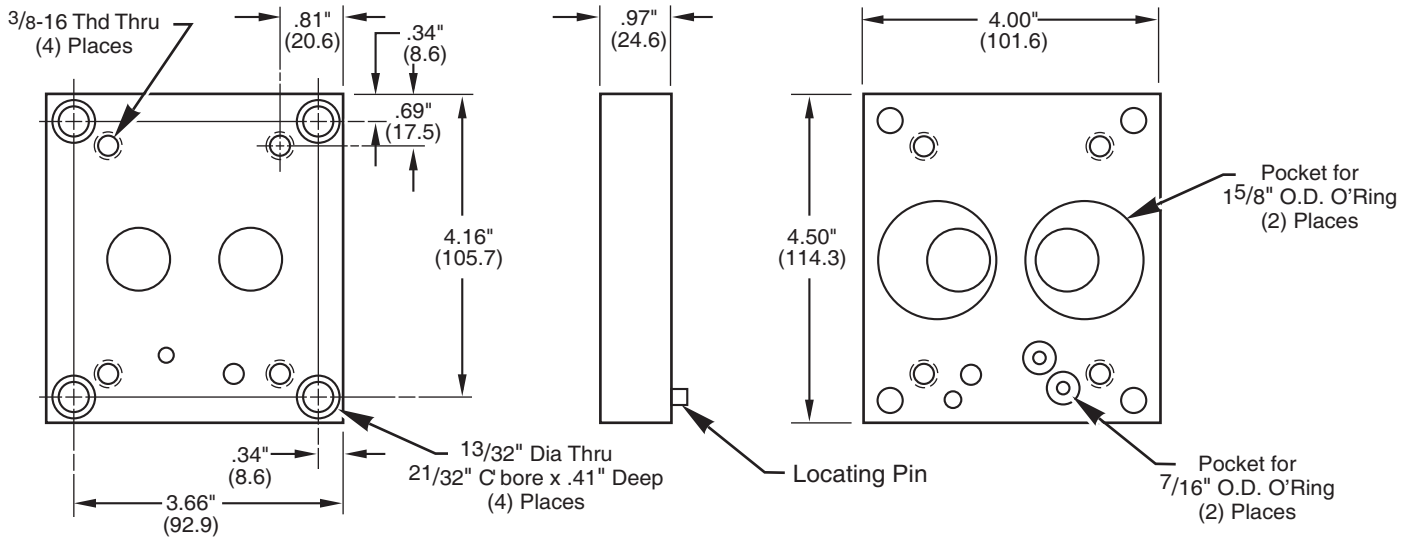

MAGNALOY VALVE ADAPTOR PART NUMBER BREAKDOWN

V A - A P 8 / P 0 - E A A - 0

- Product Code: VA - Valve Adaptor
- Material Code: A - Aluminum; S - Ductile/Steel
- Valve Pattern Code: P8 - P08
- Manifold Pattern Code: P0 - P10
- Valve Mounting Thread Code: E - English; M - Metric
- Valve - Manifold Port Orientation Code: AA - A_v common to A_m, B_v common to B_m
- Design Series

magnaloy coupling company 501 Commerce Drive Alpena, MI 49707 989 356-2186
A Division of Douville Johnston Corporation Fax: 989 354-4190 http://www.magnaloy.com

INDEX		Part Number	
	Pilot Adaptors	**Aluminum**	**Ductile/Steel**
88	For Use with NFPA D05 Valves	MA-A05ZZ-PA-ZZ-0	MA-A05ZZ-PA-ZZ-0
	Unloading (Venting) Module	**Aluminum**	**Ductile/Steel**
89	For Use with NFPA D05 Valves	MA-A05ZZ-UM-ZZ-0	MA-S05ZZ-UM-ZZ-0
	Orifice Plates	**Aluminum**	**Ductile/Steel**
90	For Use with NFPA D03 Valves	MA-A03ZZ-OP-ZZ-0	MA-S03ZZ-OP-ZZ-0
91	For Use with NFPA D05 Valves	MA-A05ZZ-OP-ZZ-0	MA-S05ZZ-OP-ZZ-0
	Tapping Plates	**Aluminum**	**Ductile/Steel**
92	For Use with NFPA D03 Valves	MA-A03_ _-TP-_ _-1	MA-S03_ _-TP-_ _-1
93	For Use with NFPA D05 Valves	MA-A05_ _-TP-_ _-1	MA-S05_ _-TP-_ _-1
94	For Use with NFPA D08 Valves	MA-A08_ _-TP-_ _-1	MA-S08_ _-TP-_ _-1

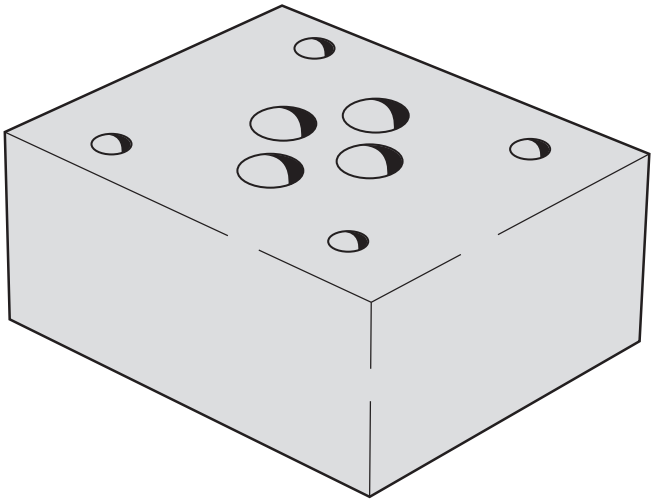

MAGNALOY MANIFOLD ACCESSORY PART NUMBER BREAKDOWN

***M A - S 0 5 Z Z - O P - Z Z - 0**

Product Code
MA - Manifold Accessory

Material Code
A - Aluminum
S - Ductile/Steel

NFPA Pattern Code
03 - D03
05 - D05
08 - D08

Port Thread Code
4P - 1/4”-18 NPTF Pipe
4S - #4 SAE O’Ring (7/16-20)
4B - 1/4”-19 BSPP British Parallel
4T - 1/4”-19 BSPT British Taper
4M - M10 x 1 Metric ISO 6149
ZZ - No Threads (With ZZ Port Code Only)

Design Series

Port Designation Code
ZZ - No Ports (With ZZ Port Thread Code Only)
PP - Perimeter Ported - Ports on All 4 Sides
PT - PR & TK Ports on Sides
AB - A & B Ports on Sides

Product Designation Code
TP - Tapping Plate
UM - Unloading Module
OP - Orifice Plate
PA - Pilot Adaptor

* *See following Manifold Accessories Pages for specific Magnaloy standard configurations with options.*

Pilot Adaptor: Module Drain or Air Pilot Supply

Application:

Allows mounting a Vickers Model DG18 4-01XX-50 air piloted directional control valve on standard subplates and manifolds. 1/8" NPT pilot connections are provided.

or

Allows for plumbing of the external drain line of a Vickers Model DGX-01-XX sandwich pressure reducing valve module, thus permitting removal and replacement of the DGX-01-XX without disturbing that connection.

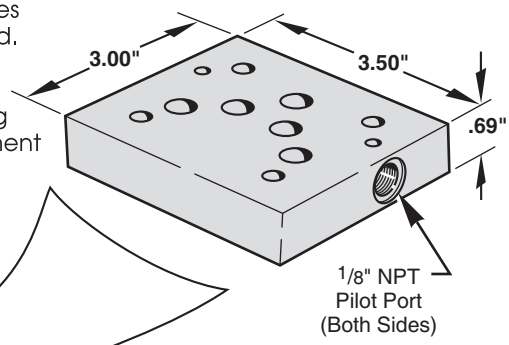

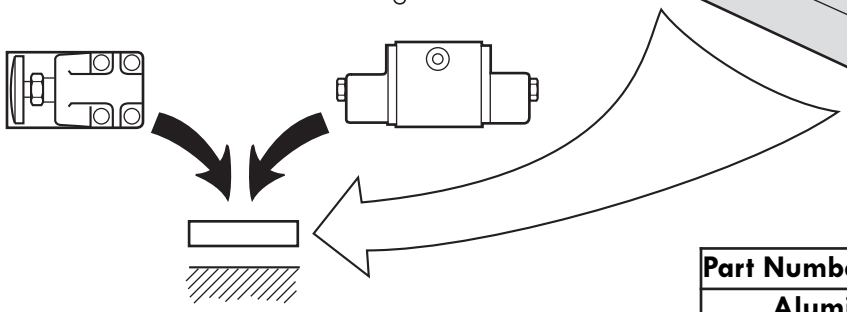

Part Numbers:	
Aluminum	**Ductile/Steel**
MA-A05ZZ-PA-ZZ-0	MA-S05ZZ-PA-ZZ-0

Supplied

O-Rings — Viton (5) 5/8" OD x 1/2" ID x 1/16" CS

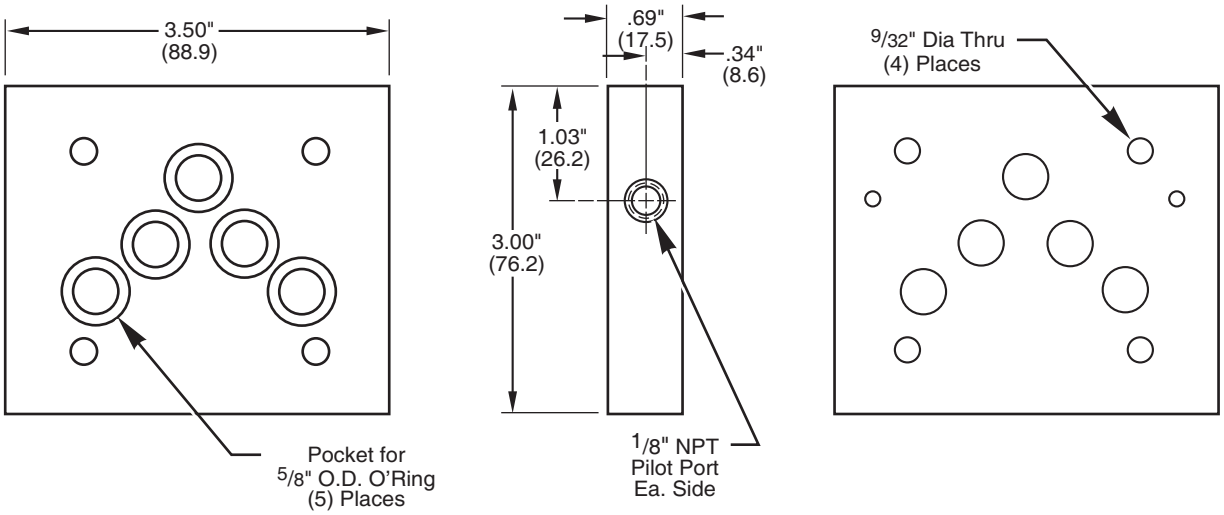

MAGNALOY MANIFOLD ACCESSORY PART NUMBER BREAKDOWN

M A - A 0 5 Z Z - P A - Z Z - 0

- Product Code: MA - Manifold Accessory
- Material Code: A - Aluminum; S - Ductile/Steel
- Valve Pattern Code: 05 - D05
- Port Thread Code: ZZ - No Threads
- Product Designation Code: PA - Pilot Adaptor
- Port Designation Code: ZZ - No Ports
- Design Series

magnaloy coupling company 501 Commerce Drive Alpena, MI 49707 989 356-2186
A Division of Douville Johnston Corporation Fax: 989 354-4190 http://www.magnaloy.com

D05 Unloading Module

Application:

This module allows unloading or venting pump pressure during idle machine cycles. It is mounted between a single solenoid, spring offset directional control valve (NFPA DO5 size) and the manifold. When the valve is in the P to A position, this module directs the pump flow back to tank, thus unloading the pump. When the directional control valve is in the P to B position, the B port is blocked and pump flow is directed to other system control valves.

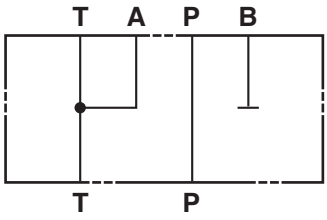

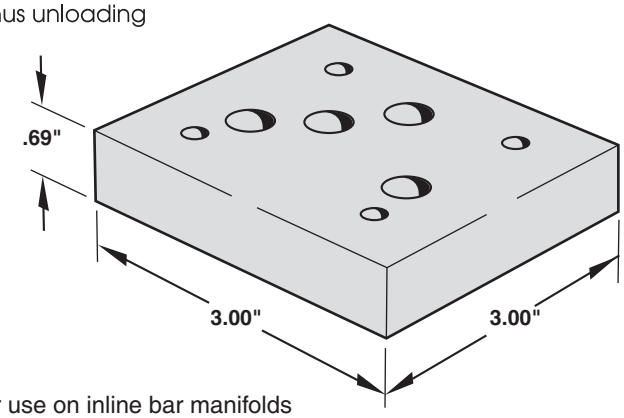

Ideal for use on inline bar manifolds with cartridge relief valve.

Supplied Hardware

O-Rings — Viton (5) 5/8" OD x 1/2" ID x 1/16" CS

Part Numbers:	
Aluminum	**Ductile/Steel**
MA-A05ZZ-UM-ZZ-0	MA-S05ZZ-UM-ZZ-0

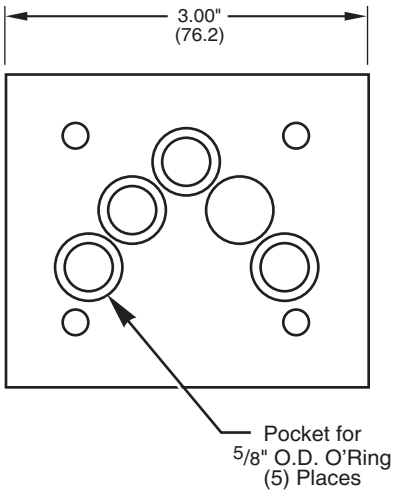

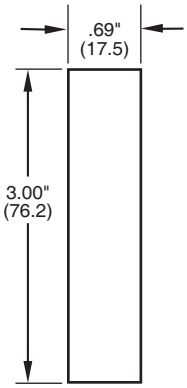

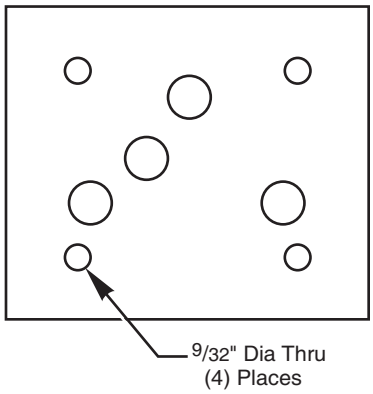

MAGNALOY MANIFOLD ACCESSORY PART NUMBER BREAKDOWN

M A - A 0 5 Z Z - U M - Z Z - 0

- Product Code: MA - Manifold Accessory
- Material Code: A - Aluminum; S - Ductile/Steel
- NFPA Pattern Code: 05 - D05
- Port Thread Code: ZZ - No Threads
- Product Designation Code: UM - Unloading Module
- Port Designation Code: ZZ - No Ports
- Design Series

magnaloy coupling company 501 Commerce Drive Alpena, MI 49707 989 356-2186
A Division of Douville Johnston Corporation Fax: 989 354-4190 http://www.magnaloy.com

D03 Orifice Plate

Applications:

- To mount between a DO3 4-way valve and a mounting surface.
- To provide for customer drilling of holes for orifices in any of the 4 port connections. Any port may be drilled to a maximum of .25" dia or may be left blocked.

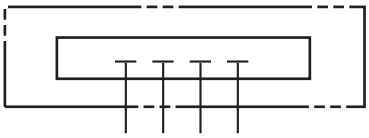

CIRCUIT

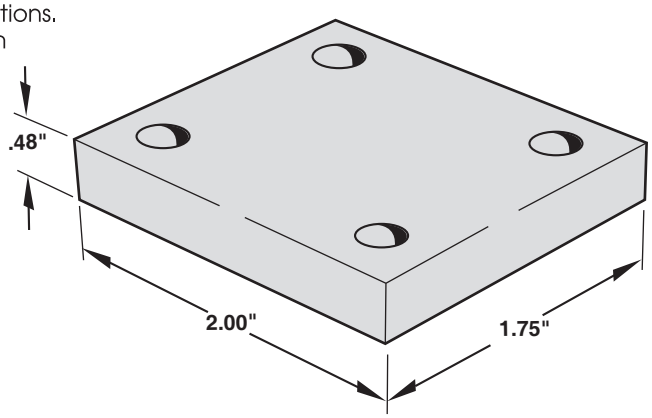

Supplied Hardware

O-Rings — Viton (5) 1/2" OD x 3/8" ID x 1/16" CS
Locating Pin — (1) 1/8" x 3/8" Roll Pin

Note:

Maximum allowable drill is .25" dia.

Part Numbers:	
Aluminum	**Ductile/Steel**
MA-A03ZZ-OP-ZZ-0	MA-S03ZZ-OP-ZZ-0

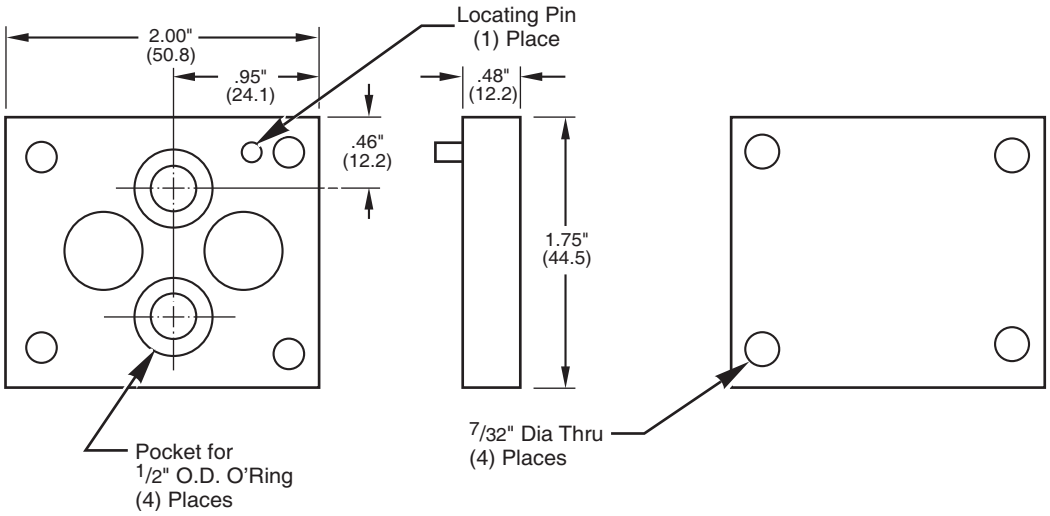

MAGNALOY MANIFOLD ACCESSORY PART NUMBER BREAKDOWN

M A - S 0 3 Z Z - O P - Z Z - 0

Product Code
MA - Manifold Accessory

Material Code
A - Aluminum
S - Ductile/Steel

NFPA Pattern Code
03 - D03

Port Thread Code
ZZ - No Threads

Design Series

Port Designation Code
ZZ - No Ports

Product Designation Code
OP - Orifice Plate

magnaloy coupling company 501 Commerce Drive Alpena, MI 49707 989 356-2186
A Division of Douville Johnston Corporation Fax: 989 354-4190 http://www.magnaloy.com

D05 Orifice Plate

Applications:

- To mount between a DO5 4-way valve and a mounting surface.
- To provide for customer drilling of holes for orifices in any of the 5 port connections. Any port may be drilled to a maximum of .438" dia or may be left blocked.

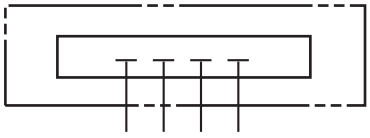

CIRCUIT

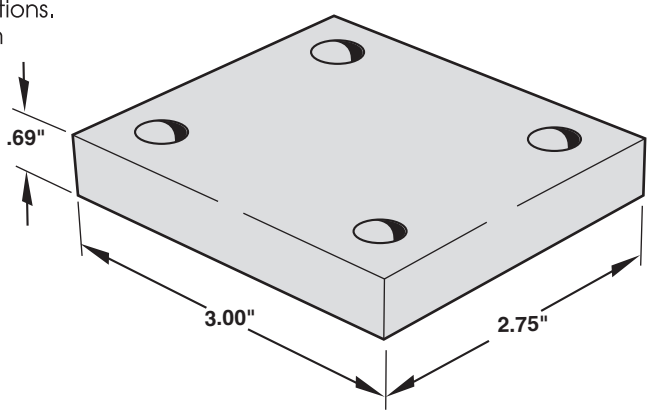

Supplied Hardware

O-Rings — Viton (5) 5/8" OD x 1/2" ID x 1/16" CS

Note:

Maximum allowable drill is .438" dia.

Part Numbers:	
Aluminum	**Ductile/Steel**
MA-A05ZZ-OP-ZZ-0	MA-S05ZZ-OP-ZZ-0

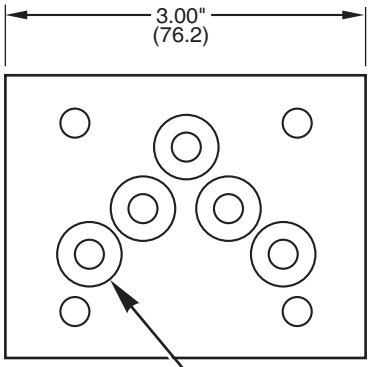

Pocket for
5/8" O.D. O'Ring
(5) Places

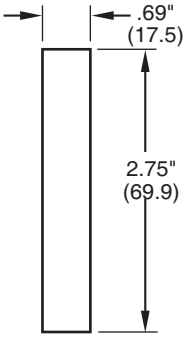

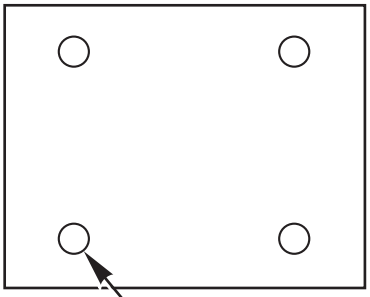

9/32" Dia Thru
(4) Places

MAGNALOY MANIFOLD ACCESSORY PART NUMBER BREAKDOWN

M A - S 0 5 Z Z - O P - Z Z - 0

Product Code
MA - Manifold Accessory

Material Code
A - Aluminum
S - Ductile/Steel

NFPA Pattern Code
05 - D05

Port Thread Code
ZZ - No Threads

Design Series

Port Designation Code
ZZ - No Ports

Product Designation Code
OP - Orifice Plate

D03 Tapping Plate

Application:

Module with NFPA DO3 pattern for use between the valve and a mounting surface, providing additional ports where needed for external pilot connections, gauges, etc. Eliminates added plumbing.

Supplied from stock with drilled and tapped ports in ordered locations.

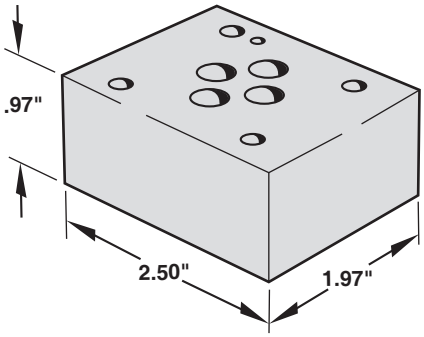

Supplied Hardware

O-Rings — Viton (4) 1/2" OD x 3/8" ID x 1/16" CS
Locating Pin — (1) 1/8" x 3/8" Roll Pin

Part Numbers:	
Aluminum	**Ductile/Steel**
MA-A03_ _-TP-_ _-1	MA-S03_ _-TP-_ _-1

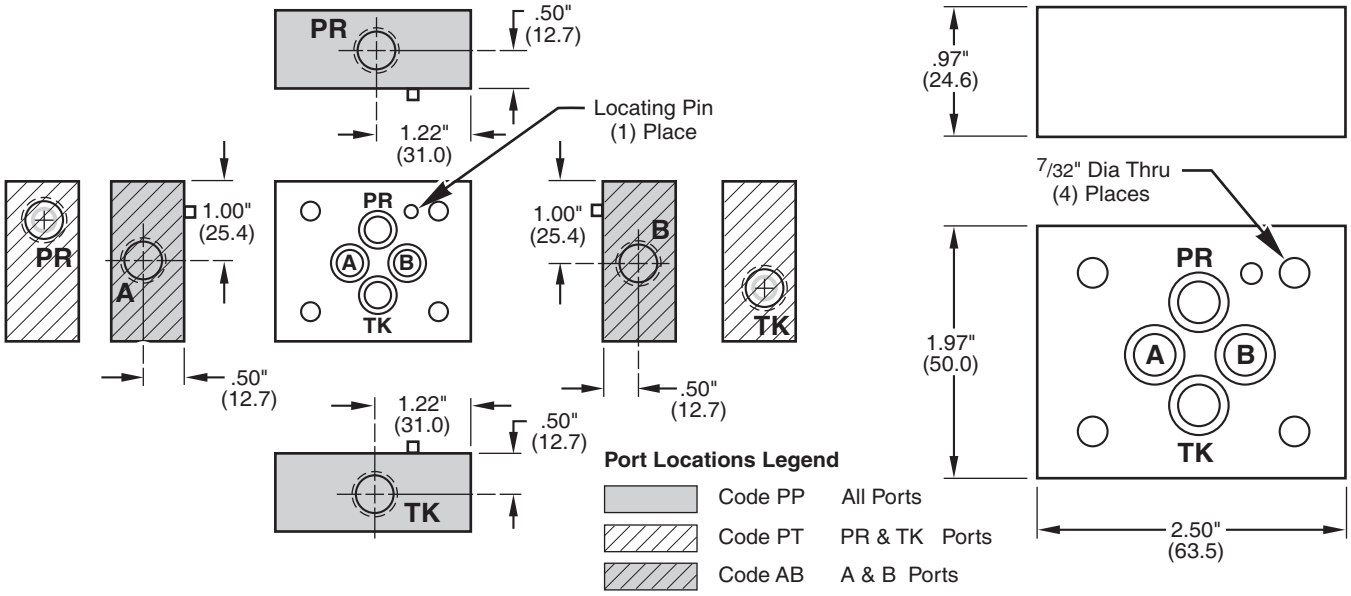

MAGNALOY MANIFOLD ACCESSORY PART NUMBER BREAKDOWN

M A - S 0 3 4 S - T P - A B - 1

Product Code
MA - Manifold Accessory

Material Code
A - Aluminum
S - Ductile/Steel

NFPA Pattern Code
03 - D03

Port Thread Code
4P - 1/4"-18 NPTF Pipe
4S - #4 SAE O'Ring (7/16-20)
4B - 1/4"-19 BSPP British Parallel
4T - 1/4"-19 BSPT British Taper
4M - M10 x 1 Metric ISO 6149
ZZ - No Threads (With ZZ Port Code Only)

Design Series

Port Designation Code
ZZ - No Ports (With ZZ Port Thread Code Only)
PP - Perimeter Ported - Ports on All 4 Sides
PT - PR & TK Ports on Sides
AB - A & B Ports on Sides

Product Designation Code
TP - Tapping Plate

magnaloy coupling company 501 Commerce Drive Alpena, MI 49707 989 356-2186
A Division of Douville Johnston Corporation Fax: 989 354-4190 http://www.magnaloy.com

D05 Tapping Plate

Application:

Module with NFPA D05 pattern for use between the valve and a mounting surface, providing additional ports where needed for external pilot connections, gauges, etc. Eliminates added plumbing.

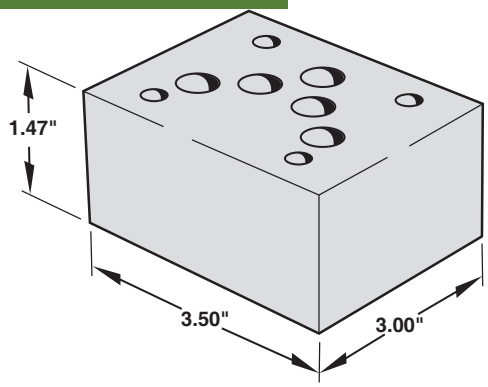

Supplied Hardware

O-Rings — Viton (5) 5/8" OD x 1/2" ID x 1/16" CS

Part Numbers:	
Aluminum	**Ductile/Steel**
MA-A05_ _-TP-_ _-1	MA-S05_ _-TP-_ _-1

SUGGESTED PORT LOCATIONS

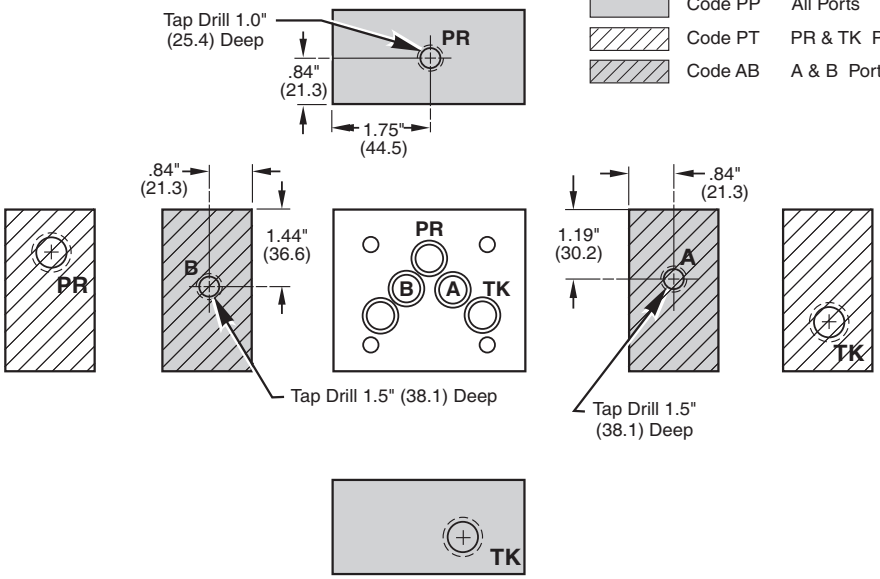

Port Locations Legend

	Code PP	All Ports
	Code PT	PR & TK Ports
	Code AB	A & B Ports

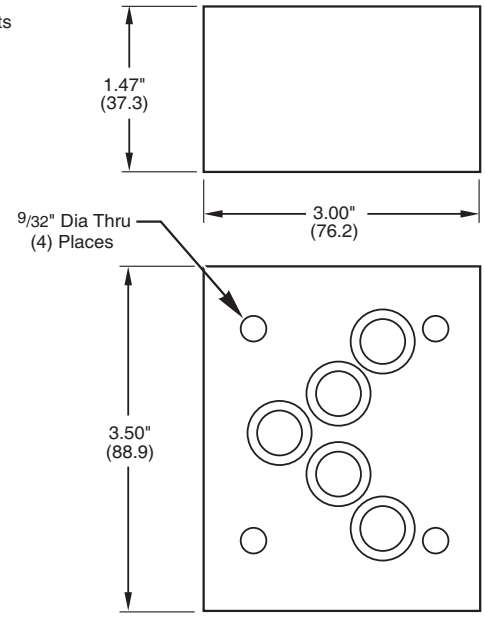

MAGNALOY MANIFOLD ACCESSORY PART NUMBER BREAKDOWN

M A - A 0 5 4 P - T P - P T - 1

Product Code
- MA - Manifold Accessory

Material Code
- A - Aluminum
- S - Ductile/Steel

NFPA Pattern Code
- 05 - D05

Port Thread Code
- 4P - 1/4"-18 NPTF Pipe
- 4S - #4 SAE O'Ring (7/16-20)
- 4B - 1/4"-19 BSPP British Parallel
- 4T - 1/4"-19 BSPT British Taper
- 4M - M10 x 1 Metric ISO 6149
- ZZ - No Threads (With ZZ Port Code Only)

Design Series

Port Designation Code
- ZZ - No Ports (With ZZ Port Thread Code Only)
- PP - Perimeter Ported - Ports on All 4 Sides
- PT - PR & TK Ports on Sides
- AB - A & B Ports on Sides

Product Designation Code
- TP - Tapping Plate

D08 Tapping Plate

Application:

Module with NFPA D08 pattern for use between the valve and a mounting surface, providing additional ports where needed for external pilot connections, gauges, etc. Eliminates added plumbing.

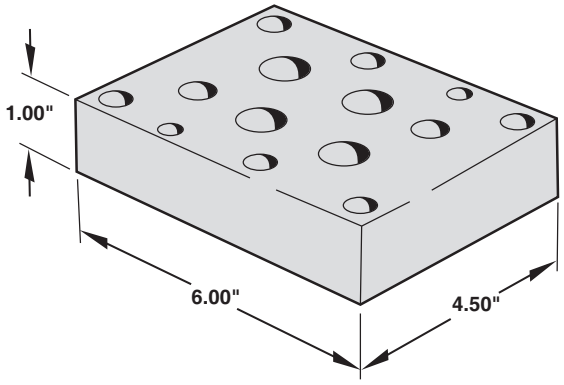

Supplied Hardware

Loc. Pins (2) 1/4" Dia. x 1/2" LG

O-Rings — Viton (2) 3/4" OD x 1/2" ID

O-Rings — Viton (4) 1.312" OD x 1.06" ID

Part Numbers:	
Aluminum	**Ductile/Steel**
MA-A03_ _-TP-_ _-1	MA-S03_ _-TP-_ _-1

CODED PORT LOCATIONS

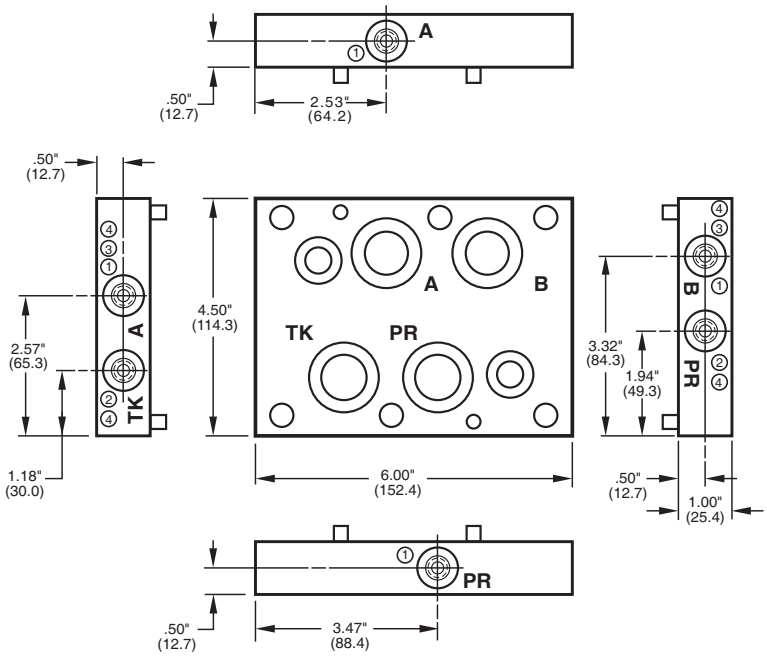

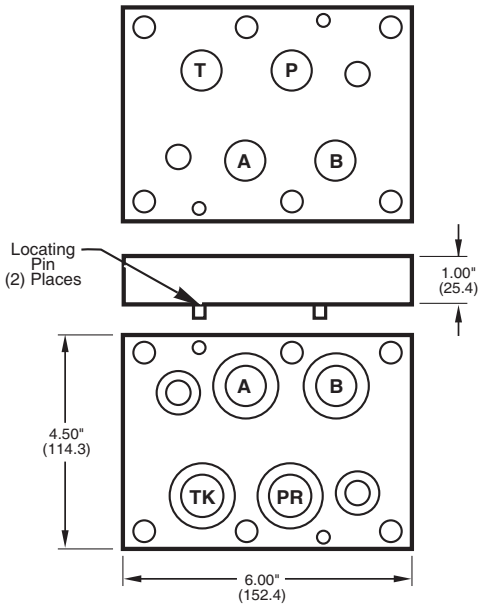

MAGNALOY MANIFOLD ACCESSORY PART NUMBER BREAKDOWN

M A - A 0 8 4 P - T P - P T - 1

Product Code
MA - Manifold Accessory

Material Code
A - Aluminum
S - Ductile/Steel

NFPA Pattern Code
08 - D08

Port Thread Code
4P - 1/4"-18 NPTF Pipe
4S - #4 SAE O'Ring (7/16-20)
4B - 1/4"-19 BSPP British Parallel
4T - 1/4"-19 BSPT British Taper
4M - M10 x 1 Metric ISO 6149
ZZ - No Threads (With ZZ Port Code Only)

Design Series

Port Designation Code
ZZ - No Ports (With ZZ Thread Code Only)
① PP - Perimeter Ported - Ports on All 4 Sides
② PT - PR & TK Ports on Short Sides
③ AB - A & B Ports on Short Sides
④ PS - All Ports - Short Sides

Product Designation Code
TP - Tapping Plate

magnaloy coupling company 501 Commerce Drive Alpena, MI 49707 989 356-2186
A Division of Douville Johnston Corporation Fax: 989 354-4190 http://www.magnaloy.com

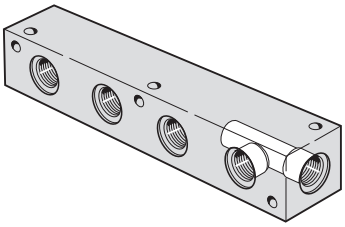
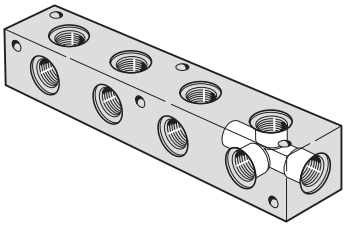
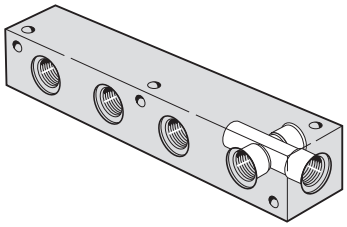
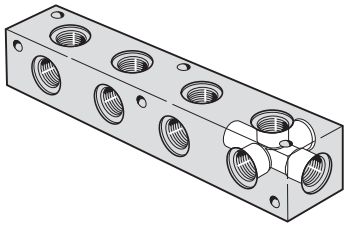

Header Bar Manifolds: Magnaloy's Header Manifolds are designed with the outlet ports connected to a common inlet port thru the center of the manifold. Header Manifolds are ordered by specifying the End Port (Inlet) Thread size and Side Port (Outlet) Thread size and the Port angle which specifies the orientation of the outlet ports. Metric End and Side Port Threads are also available (consult Factory).

HEADER MANIFOLD HARDWARE

PART NO.	MOUNTING BOLTS
H_ -_ _02P/_ _ _-_ _-1/Z	(2) or (3) 1/4-20 UNC x 2.00 Long S.H.C.S.
H_ -_ _04_/_ _ _-_ _-1/Z	(2) or (3) 1/4-20 UNC x 2.00 Long S.H.C.S.
H_ -_ _06_/_ _ _-_ _-1/Z	(2) or (3) 1/4-20 UNC x 2.25 Long S.H.C.S.
H_ -_ _08_/_ _ _-_ _-1/Z	(2) or (3) 1/4-20 UNC x 2.25 Long S.H.C.S.
H_ -_ _12_/_ _ _-_ _-1/Z	(2) or (3) 1/4-20 UNC x 2.50 Long S.H.C.S.
H_ -_ _16_/_ _ _-_ _-1/Z	(2) or (3) 5/16-18 UNC x 3.00 Long S.H.C.S.
H_ -_ _20_/_ _ _-_ _-1/Z	(2) or (3) 3/8-16 UNC x 3.50 Long S.H.C.S.
H_ -_ _24_/_ _ _-_ _-1/Z	(2) or (3) 1/2-13 UNC x 4.50 Long S.H.C.S.
H_ -_ _32_/_ _ _-_ _-1/Z	(2) or (3) 1/2-13 UNC x 5.00 Long S.H.C.S.

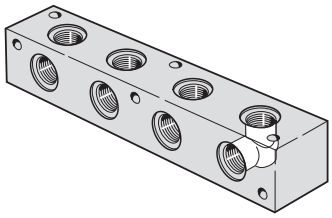
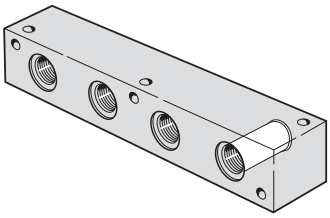
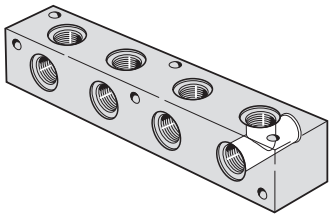

Junction Bar Manifolds: Magnaloy's Junction Manifolds are designed with varying size Inlet (End) and Outlet (Side) ports to accommodate altering piping sizes and/or directions. Junction Manifolds are ordered by specifying the Inlet Port Thread size and the Outlet Port Thread size and the Port Angle which specifies the orientation of the outlet ports. Metric Inlet and Outlet Port Threads are also available (consult Factory).

JUNCTION MANIFOLD HARDWARE

PART NO.	MOUNTING BOLTS
J_ -_ _000/01P-_ _-1/Z	(2) or (3) 1/4-20 UNC x 2.00 Long S.H.C.S.
J_ -_ _000/02P-_ _-1/Z	(2) or (3) 1/4-20 UNC x 2.00 Long S.H.C.S.
J_ -_ _000/04_-_ _-1/Z	(2) or (3) 1/4-20 UNC x 2.25 Long S.H.C.S.
J_ -_ _000/06_-_ _-1/Z	(2) or (3) 1/4-20 UNC x 2.25 Long S.H.C.S.
J_ -_ _000/08_-_ _-1/Z	(2) or (3) 1/4-20 UNC x 2.50 Long S.H.C.S.
J_ -_ _000/12_-_ _-1/Z	(2) or (3) 5/16-18 UNC x 3.00 Long S.H.C.S.
J_ -_ _000/16_-_ _-1/Z	(2) or (3) 3/8-16 UNC x 3.50 Long S.H.C.S.
J_ -_ _000/20_-_ _-1/Z	(2) or (3) 1/2-13 UNC x 4.50 Long S.H.C.S.
J_ -_ _000/24_-_ _-1/Z	(2) or (3) 1/2-13 UNC x 5.00 Long S.H.C.S.

HEADER MANIFOLD - 0°
Connections Out One Side Only
(1 per Station)

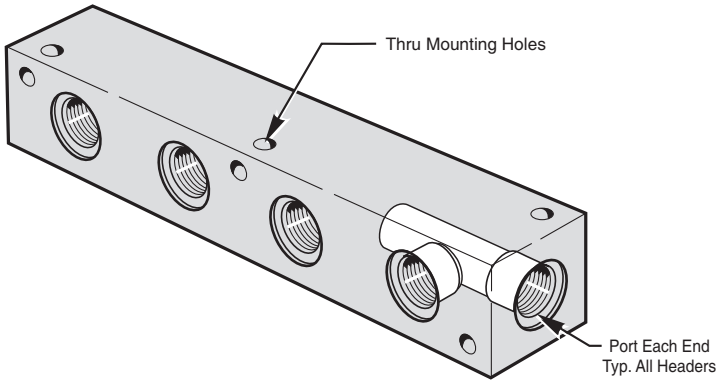

HEADER MANIFOLD - 90°
Side Connections at 90°
(2 per Station)

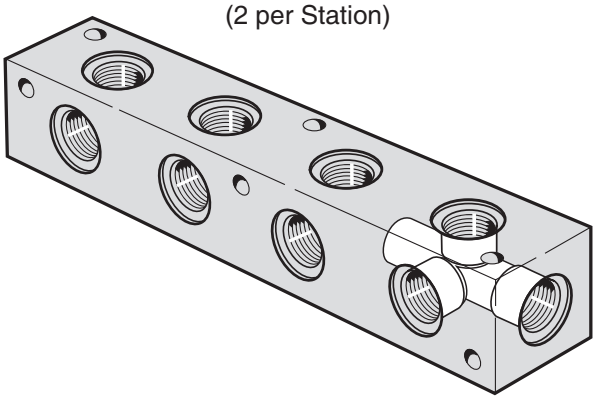

HEADER MANIFOLD - 180°
Side Connection Thru
(2 per Station)

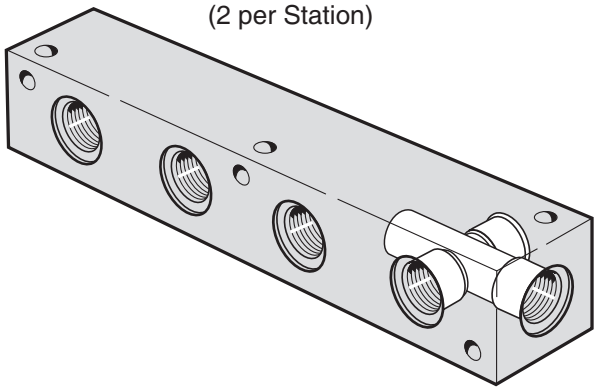

HEADER MANIFOLD - 270°
3 Side Connections
Terminating at Manifold's Center
(3 per Station)

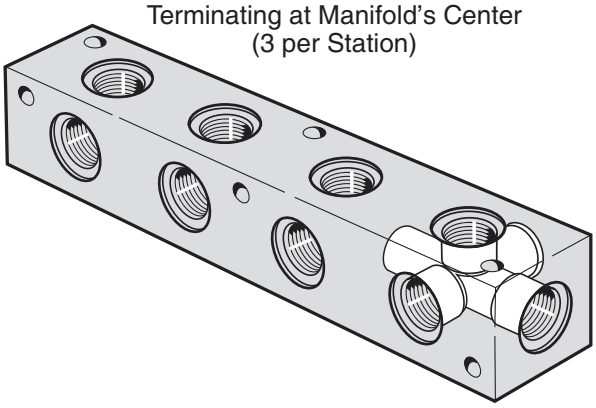

MAGNALOY HEADER MANIFOLD - PART NUMBER BREAKDOWN

H A - 0 0 0 8 S / 0 8 S - 0 4 - 1 / Z

Product Code
H - Header Manifold

Material Code
A - Aluminum
S - Ductile/Steel

Port Angles
00 - 0°
09 - 90°
18 - 180°
27 - 270°

End Ports * (Inlet)
##S - SAE
##P - Pipe

01P - 1/16 NPT	04S - #4 SAE
02P - 1/8 NPT	06S - #6 SAE
04P - 1/4 NPT	08S - #8 SAE
06P - 3/8NPT	12S - #12 SAE
08P - 1/2 NPT	16S - #16 SAE
12P - 3/4 NPT	20S - #20 SAE
16P - 1" NPT	24S - #24 SAE
20P - 1 1/4 NPT	32S - #32 SAE
24P - 1 1/2 NPT	
32P - 2" NPT	

Side Ports * (Outlet)
##S - SAE
##P - NPTF

Number of Stations

Design Series

Options
Z - No Options

* See size charts for standard sizes and porting. See Page 95 for Mounting Hardware.

magnaloy coupling company 501 Commerce Drive Alpena, MI 49707 989 356-2186
A Division of Douville Johnston Corporation Fax: 989 354-4190 http://www.magnaloy.com

Header Bar Manifolds

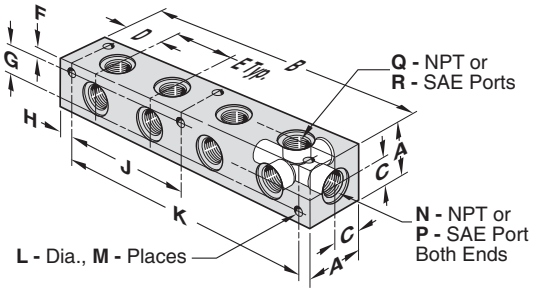

01P SIDE PORT

PART NO.	A	B	C	D	E	F	G	H	J	K	L	M	N	P	Q	R
H_- _ _02P/01P-02-1/Z		3.250							--	2.625		4				
H_- _ _02P/01P-03-1/Z		4.500							--	3.875		4				
H_- _ _02P/01P-04-1/Z		5.750							--	5.125		4				
H_- _ _02P/01P-05-1/Z		7.000							--	6.375		4				
H_- _ _02P/01P-06-1/Z	1.500	8.250	0.750	1.000	1.250	0.250	1.000	0.313	3.813	7.625	0.281	6	1/8	--	1/16	--
H_- _ _02P/01P-07-1/Z		9.500							3.813	8.875		6				
H_- _ _02P/01P-08-1/Z		10.750							5.063	10.125		6				
H_- _ _02P/01P-09-1/Z		12.000							5.063	11.375		6				
H_- _ _02P/01P-10-1/Z		13.250							6.313	12.625		6				

02P SIDE PORT

PART NO.	A	B	C	D	E	F	G	H	J	K	L	M	N	P	Q	R
H_- _ _02P/02P-02-1/Z		3.625							--	3.000		4				
H_- _ _02P/02P-03-1/Z		5.000							--	4.375		4				
H_- _ _02P/02P-04-1/Z		6.375							--	5.750		4				
H_- _ _02P/02P-05-1/Z		7.750							--	7.125		4				
H_- _ _02P/02P-06-1/Z	1.500	9.125	0.750	1.125	1.375	0.250	1.000	0.313	4.250	8.500	0.281	6	1/8	--	1/8	--
H_- _ _02P/02P-07-1/Z		10.500							4.250	9.875		6				
H_- _ _02P/02P-08-1/Z		11.875							5.625	11.250		6				
H_- _ _02P/02P-09-1/Z		13.250							5.625	12.625		6				
H_- _ _02P/02P-10-1/Z		14.625							7.000	14.000		6				

PART NO.	A	B	C	D	E	F	G	H	J	K	L	M	N	P	Q	R
H_- _ _04_/02P-02-1/Z		3.625							--	3.000		4				
H_- _ _04_/02P-03-1/Z		5.000							--	4.375		4				
H_- _ _04_/02P-04-1/Z		6.375							--	5.750		4				
H_- _ _04_/02P-05-1/Z		7.750							--	7.125		4				
H_- _ _04_/02P-06-1/Z	1.500	9.125	0.750	1.125	1.375	0.250	1.000	0.313	4.250	8.500	0.281	6	1/4	-4	1/8	--
H_- _ _04_/02P-07-1/Z		10.500							4.250	9.875		6				
H_- _ _04_/02P-08-1/Z		11.875							5.625	11.250		6				
H_- _ _04_/02P-09-1/Z		13.250							5.625	12.625		6				
H_- _ _04_/02P-10-1/Z		14.625							7.000	14.000		6				

PART NO.	A	B	C	D	E	F	G	H	J	K	L	M	N	P	Q	R
H_- _ _06_/02P-02-1/Z		3.625							--	3.000		4				
H_- _ _06_/02P-03-1/Z		5.000							--	4.375		4				
H_- _ _06_/02P-04-1/Z		6.375							--	5.750		4				
H_- _ _06_/02P-05-1/Z		7.750							--	7.125		4				
H_- _ _06_/02P-06-1/Z	1.750	9.125	0.875	1.125	1.375	0.250	1.250	0.313	4.250	8.500	0.281	6	3/8	-6	1/8	--
H_- _ _06_/02P-07-1/Z		10.500							4.250	9.875		6				
H_- _ _06_/02P-08-1/Z		11.875							5.625	11.250		6				
H_- _ _06_/02P-09-1/Z		13.250							5.625	12.625		6				
H_- _ _06_/02P-10-1/Z		14.625							7.000	14.000		6				

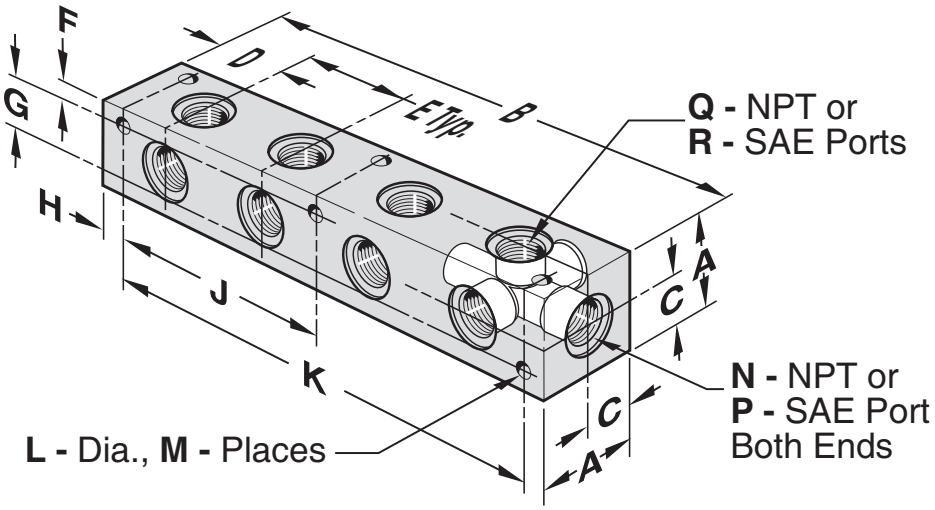

04_ SIDE PORT

PART NO.	A	B	C	D	E	F	G	H	J	K	L	M	N	P	Q	R
H_- _ _04_/04_-02-1/Z		3.875							--	3.250		4				
H_- _ _04_/04_-03-1/Z		5.625							--	5.000		4				
H_- _ _04_/04_-04-1/Z		7.375							--	6.750		4				
H_- _ _04_/04_-05-1/Z		9.125							--	8.500		4				
H_- _ _04_/04_-06-1/Z	1.500	10.875	0.750	1.063	1.750	0.250	1.000	0.313	5.125	10.250	0.281	6	1/4	-4	1/4	-4
H_- _ _04_/04_-07-1/Z		12.625							5.125	12.000		6				
H_- _ _04_/04_-08-1/Z		14.375							6.875	13.750		6				
H_- _ _04_/04_-09-1/Z		16.125							6.875	15.500		6				
H_- _ _04_/04_-10-1/Z		17.875							8.625	17.250		6				

PART NO.	A	B	C	D	E	F	G	H	J	K	L	M	N	P	Q	R
H_- _ _06_/04_-02-1/Z		3.875							--	3.250		4				
H_- _ _06_/04_-03-1/Z		5.625							--	5.000		4				
H_- _ _06_/04_-04-1/Z		7.375							--	6.750		4				
H_- _ _06_/04_-05-1/Z		9.125							--	8.500		4				
H_- _ _06_/04_-06-1/Z	1.750	10.875	0.875	1.063	1.750	0.250	1.250	0.313	5.125	10.250	0.281	6	3/8	-6	1/4	-4
H_- _ _06_/04_-07-1/Z		12.625							5.125	12.000		6				
H_- _ _06_/04_-08-1/Z		14.375							6.875	13.750		6				
H_- _ _06_/04_-09-1/Z		16.125							6.875	15.500		6				
H_- _ _06_/04_-10-1/Z		17.875							8.625	17.250		6				

PART NO.	A	B	C	D	E	F	G	H	J	K	L	M	N	P	Q	R
H_- _ _08_/04_-02-1/Z		3.875							--	3.250		4				
H_- _ _08_/04_-03-1/Z		5.625							--	5.000		4				
H_- _ _08_/04_-04-1/Z		7.375							--	6.750		4				
H_- _ _08_/04_-05-1/Z		9.125							--	8.500		4				
H_- _ _08_/04_-06-1/Z	1.750	10.875	0.875	1.063	1.750	0.250	1.250	0.313	5.125	10.250	0.281	6	1/2	-8	1/4	-4
H_- _ _08_/04_-07-1/Z		12.625							5.125	12.000		6				
H_- _ _08_/04_-08-1/Z		14.375							6.875	13.750		6				
H_- _ _08_/04_-09-1/Z		16.125							6.875	15.500		6				
H_- _ _08_/04_-10-1/Z		17.875							8.625	17.250		6				

magnaloy coupling company 501 Commerce Drive Alpena, MI 49707 989 356-2186
A Division of Douville Johnston Corporation Fax: 989 354-4190 http://www.magnaloy.com

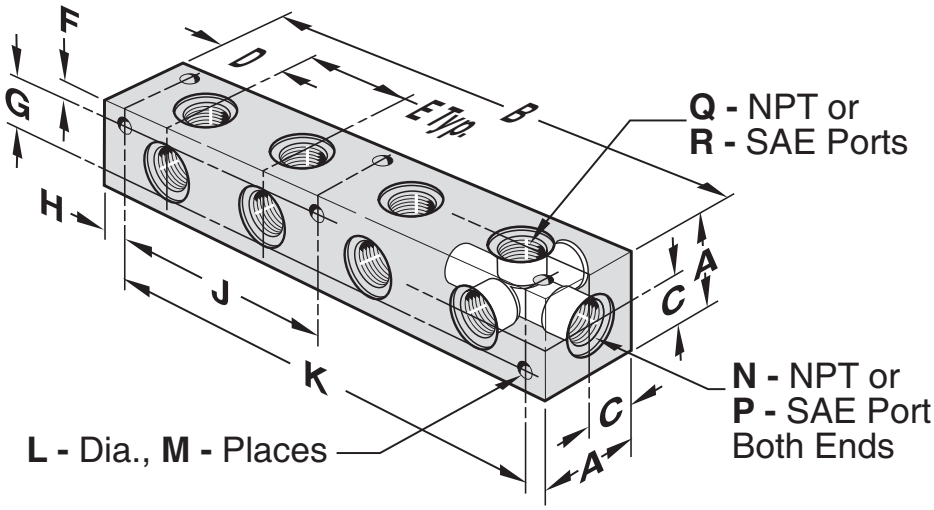

06_ SIDE PORT

PART NO.	A	B	C	D	E	F	G	H	J	K	L	M	N	P	Q	R
H_- _ _06_/06_-02-1/Z		5.000							--	4.375		4				
H_- _ _06_/06_-03-1/Z		7.000							--	6.375		4				
H_- _ _06_/06_-04-1/Z		9.000							--	8.375		4				
H_- _ _06_/06_-05-1/Z		11.000							--	10.375		4				
H_- _ _06_/06_-06-1/Z	1.750	13.000	0.875	1.500	2.000	0.250	1.250	0.313	6.188	12.375	0.281	6	3/8	-6	3/8	-6
H_- _ _06_/06_-07-1/Z		15.000							6.188	14.375		6				
H_- _ _06_/06_-08-1/Z		17.000							8.188	16.375		6				
H_- _ _06_/06_-09-1/Z		19.000							8.188	18.375		6				
H_- _ _06_/06_-10-1/Z		21.000							10.188	20.375		6				

PART NO.	A	B	C	D	E	F	G	H	J	K	L	M	N	P	Q	R
H_- _ _08_/06_-02-1/Z		5.000							--	4.375		4				
H_- _ _08_/06_-03-1/Z		7.000							--	6.375		4				
H_- _ _08_/06_-04-1/Z		9.000							--	8.375		4				
H_- _ _08_/06_-05-1/Z		11.000							--	10.375		4				
H_- _ _08_/06_-06-1/Z	1.750	13.000	0.875	1.500	2.000	0.250	1.250	0.313	6.188	12.375	0.281	6	1/2	-8	3/8	-6
H_- _ _08_/06_-07-1/Z		15.000							6.188	14.375		6				
H_- _ _08_/06_-08-1/Z		17.000							8.188	16.375		6				
H_- _ _08_/06_-09-1/Z		19.000							8.188	18.375		6				
H_- _ _06_/06_-10-1/Z		21.000							10.188	20.375		6				

PART NO.	A	B	C	D	E	F	G	H	J	K	L	M	N	P	Q	R
H_- _ _12_/06_-02-1/Z		5.000							--	4.375		4				
H_- _ _12_/06_-03-1/Z		7.000							--	6.375		4				
H_- _ _12_/06_-04-1/Z		9.000							--	8.375		4				
H_- _ _12_/06_-05-1/Z		11.000							--	10.375		4				
H_- _ _12_/06_-06-1/Z	2.000	13.000	1.000	1.500	2.000	0.250	1.500	0.313	6.188	12.375	0.281	6	3/4	-12	3/8	-6
H_- _ _12_/06_-07-1/Z		15.000							6.188	14.375		6				
H_- _ _12_/06_-08-1/Z		17.000							8.188	16.375		6				
H_- _ _12_/06_-09-1/Z		19.000							8.188	18.375		6				
H_- _ _12_/06_-10-1/Z		21.000							10.188	20.375		6				

08_ SIDE PORT

PART NO.	A	B	C	D	E	F	G	H	J	K	L	M	N	P	Q	R
H_- _ _08_/08_-02-1/Z	1.750	5.375	0.875	1.500	2.375	0.250	1.250	0.313	--	4.750	0.281	4	1/2	-8	1/2	-8
H_- _ _08_/08_-03-1/Z		7.750							--	7.125		4				
H_- _ _08_/08_-04-1/Z		10.125							--	9.500		4				
H_- _ _08_/08_-05-1/Z		12.500							--	11.875		4				
H_- _ _08_/08_-06-1/Z		14.875							7.130	14.250		6				
H_- _ _08_/08_-07-1/Z		17.250							7.130	16.625		6				
H_- _ _08_/08_-08-1/Z		19.625							9.500	19.000		6				
H_- _ _08_/08_-09-1/Z		22.000							9.500	21.375		6				

PART NO.	A	B	C	D	E	F	G	H	J	K	L	M	N	P	Q	R
H_- _ _12_/08_-02-1/Z	2.000	5.375	1.000	1.500	2.375	0.250	1.500	0.313	--	4.750	0.281	4	3/4	-12	1/2	-8
H_- _ _12_/08_-03-1/Z		7.750							--	7.125		4				
H_- _ _12_/08_-04-1/Z		10.125							--	9.500		4				
H_- _ _12_/08_-05-1/Z		12.500							--	11.875		4				
H_- _ _12_/08_-06-1/Z		14.875							7.125	14.250		6				
H_- _ _12_/08_-07-1/Z		17.250							7.125	16.625		6				
H_- _ _12_/08_-08-1/Z		19.625							9.500	19.000		6				
H_- _ _12_/08_-09-1/Z		22.000							9.500	21.375		6				

PART NO.	A	B	C	D	E	F	G	H	J	K	L	M	N	P	Q	R
H_- _ _16_/08_-02-1/Z	2.500	5.375	1.250	1.500	2.375	0.280	1.940	0.375	--	4.625	0.344	4	1	-16	1/2	-8
H_- _ _16_/08_-03-1/Z		7.750							--	7.000		4				
H_- _ _16_/08_-04-1/Z		10.125							--	9.375		4				
H_- _ _16_/08_-05-1/Z		12.500							--	11.750		4				
H_- _ _16_/08_-06-1/Z		14.875							7.063	14.125		6				
H_- _ _16_/08_-07-1/Z		17.250							7.063	16.500		6				
H_- _ _16_/08_-08-1/Z		19.625							9.438	18.875		6				
H_- _ _16_/08_-09-1/Z		22.000							9.438	21.250		6				

12_ SIDE PORT

PART NO.	A	B	C	D	E	F	G	H	J	K	L	M	N	P	Q	R
H_- _ _12_/12_-02-1/Z	2.000	6.875	1.000	1.813	3.250	0.250	1.500	0.313	--	6.250	0.281	4	3/4	-12	3/4	-12
H_- _ _12_/12_-03-1/Z		10.125							--	9.500		4				
H_- _ _12_/12_-04-1/Z		13.375							--	12.750		4				
H_- _ _12_/12_-05-1/Z		16.625							--	16.000		4				
H_- _ _12_/12_-06-1/Z		19.875							9.625	19.250		6				
H_- _ _12_/12_-07-1/Z		23.125							9.625	22.500		6				

PART NO.	A	B	C	D	E	F	G	H	J	K	L	M	N	P	Q	R
H_- _ _16_/12_-02-1/Z	2.500	6.875	1.250	1.813	3.250	0.280	1.940	0.375	--	6.125	0.344	4	1	-16	3/4	-12
H_- _ _16_/12_-03-1/Z		10.125							--	9.375		4				
H_- _ _16_/12_-04-1/Z		13.375							--	12.625		4				
H_- _ _16_/12_-05-1/Z		16.625							--	15.875		4				
H_- _ _16_/12_-06-1/Z		19.875							9.563	19.125		6				
H_- _ _16_/12_-07-1/Z		23.125							9.563	22.375		6				

PART NO.	A	B	C	D	E	F	G	H	J	K	L	M	N	P	Q	R
H_- _ _20_/12_-02-1/Z	3.000	6.875	1.500	1.813	3.250	0.344	2.312	0.375	--	6.125	0.406	4	1-1/4	-20	3/4	-12
H_- _ _20_/12_-03-1/Z		10.125							--	9.375		4				
H_- _ _20_/12_-04-1/Z		13.375							--	12.625		4				
H_- _ _20_/12_-05-1/Z		16.625							--	15.875		4				
H_- _ _20_/12_-06-1/Z		19.875							9.563	19.125		6				
H_- _ _20_/12_-07-1/Z		23.125							9.563	22.375		6				

magnaloy coupling company 501 Commerce Drive Alpena, MI 49707 989 356-2186
A Division of Douville Johnston Corporation Fax: 989 354-4190 http://www.magnaloy.com

Header Bar Manifolds

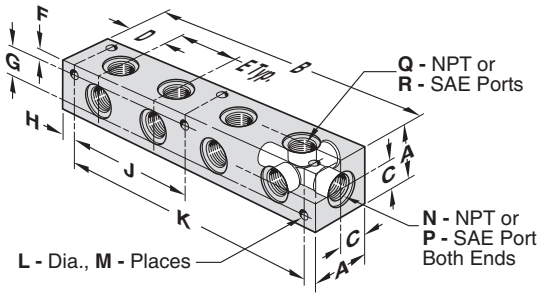

16_ SIDE PORT

PART NO.	A	B	C	D	E	F	G	H	J	K	L	M	N	P	Q	R
H_- _ _16_/16_-02-1/Z		7.750							--	7.000		4				
H_- _ _16_/16_-03-1/Z		11.500							--	10.750		4				
H_- _ _16_/16_-04-1/Z	2.500	15.250	1.250	2.000	3.750	0.280	1.940	0.375	--	14.500	0.344	4	1	-16	1	-16
H_- _ _16_/16_-05-1/Z		19.000							7.250	18.250		6				
H_- _ _16_/16_-06-1/Z		22.750							11.000	22.000		6				

PART NO.	A	B	C	D	E	F	G	H	J	K	L	M	N	P	Q	R
H_- _ _20_/16_-02-1/Z		7.750							--	7.000		4				
H_- _ _20_/16_-03-1/Z		11.500							--	10.750		4				
H_- _ _20_/16_-04-1/Z	3.000	15.250	1.500	2.000	3.750	0.344	2.312	0.375	--	14.500	0.406	4	1-1/4	-20	1	-16
H_- _ _20_/16_-05-1/Z		19.000							7.250	18.250		6				
H_- _ _20_/16_-06-1/Z		22.750							11.000	22.000		6				

PART NO.	A	B	C	D	E	F	G	H	J	K	L	M	N	P	Q	R
H_- _ _24_/16_-02-1/Z		7.750							--	6.750		4				
H_- _ _24_/16_-03-1/Z		11.500							--	10.500		4				
H_- _ _24_/16_-04-1/Z	3.500	15.250	1.750	2.000	3.750	0.406	2.688	0.500	--	14.250	0.531	4	1-1/2	-24	1	-16
H_- _ _24_/16_-05-1/Z		19.000							7.125	18.000		6				
H_- _ _24_/16_-06-1/Z		22.750							10.875	21.750		6				

20_ SIDE PORT

PART NO.	A	B	C	D	E	F	G	H	J	K	L	M	N	P	Q	R
H_- _ _20_/20_-02-1/Z		8.500							--	7.750		4				
H_- _ _20_/20_-03-1/Z	3.000	12.500	1.500	2.250	4.000	0.344	2.312	0.375	--	11.750	0.406	4	1-1/4	-20	1-1/4	-20
H_- _ _20_/20_-04-1/Z		16.500							--	15.750		4				
H_- _ _20_/20_-05-1/Z		20.500							7.875	19.750		6				

PART NO.	A	B	C	D	E	F	G	H	J	K	L	M	N	P	Q	R
H_- _ _24_/20_-02-1/Z		8.500							--	7.500		4				
H_- _ _24_/20_-03-1/Z	3.500	12.500	1.750	2.250	4.000	0.406	2.688	0.500	--	11.500	0.531	4	1-1/2	-24	1-1/4	-20
H_- _ _24_/20_-04-1/Z		16.500							--	15.500		4				
H_- _ _24_/20_-05-1/Z		20.500							7.750	19.500		6				

24_ SIDE PORT

PART NO.	A	B	C	D	E	F	G	H	J	K	L	M	N	P	Q	R
H_- _ _24_/24_-02-1/Z		10.000							--	9.000		4				
H_- _ _24_/24_-03-1/Z	3.500	15.000	1.750	2.500	5.000	0.406	2.688	0.500	--	14.000	0.531	4	1-1/2	-24	1-1/2	-24
H_- _ _24_/24_-04-1/Z		20.000							9.500	19.000		6				

PART NO.	A	B	C	D	E	F	G	H	J	K	L	M	N	P	Q	R
H_- _ _32_/24_-02-1/Z		10.000							--	9.000		4				
H_- _ _32_/24_-03-1/Z	4.000	15.000	2.000	2.500	5.000	0.406	3.188	0.500	--	14.000	0.531	4	2	-32	1-1/2	-24
H_- _ _32_/24_-04-1/Z		20.000							9.500	19.000		6				

JUNCTION MANIFOLD - 90°
Side Connections at 90°
(2 per Station)

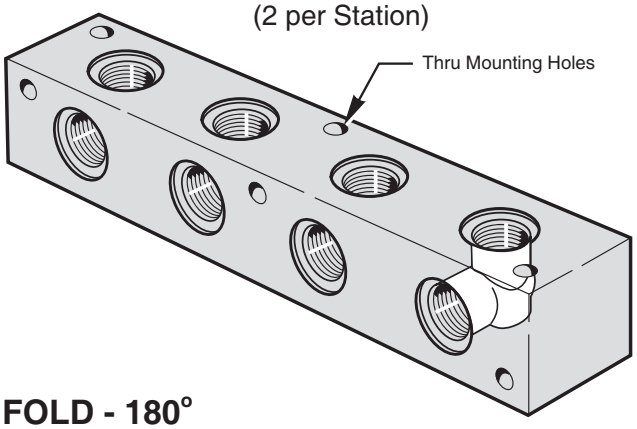

JUNCTION MANIFOLD - 180°
Side Connection Thru
(2 per Station)

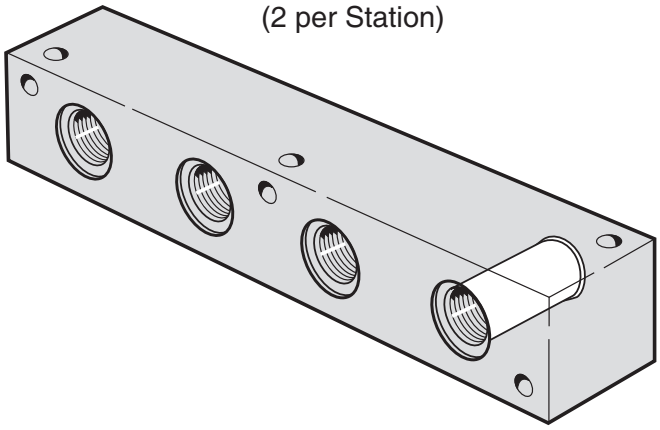

JUNCTION MANIFOLD - 270°
3 Side Connections
Terminating at Manifold's Center
(3 per Station)

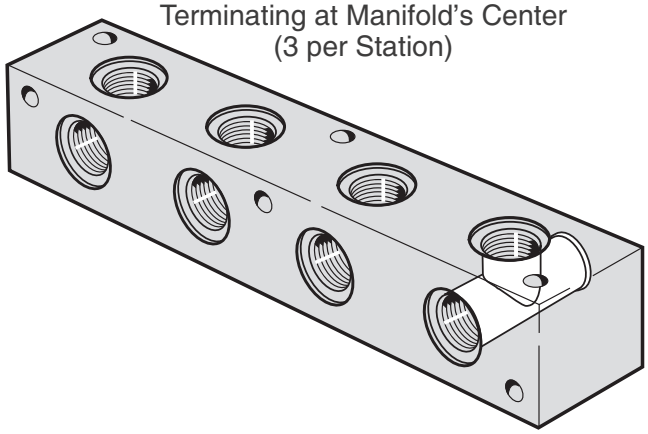

3

MAGNALOY JUNCTION MANIFOLD - PART NUMBER BREAKDOWN

J A - 2 7 0 0 0 / 0 8 S - 0 4 - 1 / Z

Product Code
J - Junction Manifold

Material Code
A - Aluminum
S - Ductile/Steel

Port Angles
09 - 90°
18 - 180°
27 - 270°

End Ports
'000' for all
Junction Manifold

* See size charts for standard sizes and porting. See Page 95 for Mounting Hardware.

01P - 1/16 NPT	04S - #4 SAE
02P - 1/8 NPT	06S - #6 SAE
04P - 1/4 NPT	08S - #8 SAE
06P - 3/8NPT	12S - #12 SAE
08P - 1/2 NPT	16S - #16 SAE
12P - 3/4 NPT	20S - #20 SAE
16P - 1" NPT	24S - #24 SAE
20P - 1 1/4 NPT	32S - #32 SAE
24P - 1 1/2 NPT	
32P - 2" NPT	

Side Ports *
##S - SAE
##P - NPTF

Number of Stations

Design Series

Options
Z - No Options

magnaloy coupling company 501 Commerce Drive Alpena, MI 49707 989 356-2186
A Division of Douville Johnston Corporation Fax: 989 354-4190 http://www.magnaloy.com

Junction Bar Manifolds

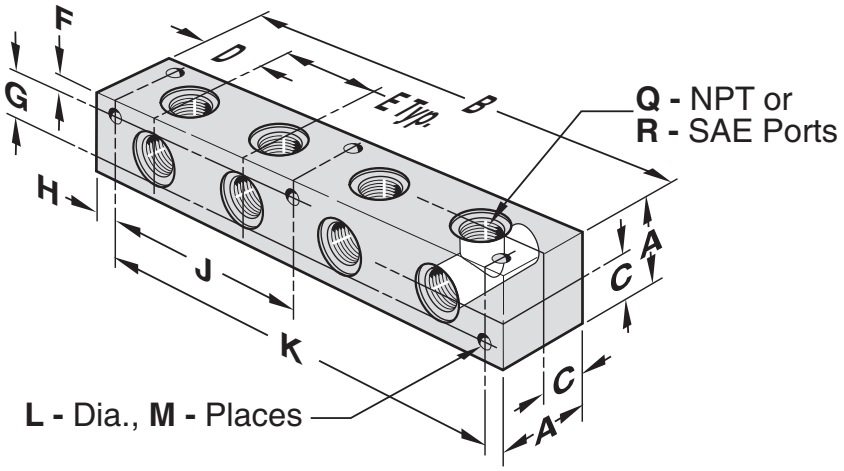

01P SIDE PORT

PART NO.	A	B	C	D	E	F	G	H	J	K	L	M	Q	R
J_-_ _000/01P-02-1/Z		3.250							--	2.625		4		
J_-_ _000/01P-03-1/Z		4.500							--	3.875		4		
J_-_ _000/01P-04-1/Z		5.750							--	5.125		4		
J_-_ _000/01P-05-1/Z		7.000							--	6.375		4		
J_-_ _000/01P-06-1/Z	1.500	8.250	0.750	1.000	1.250	0.250	1.000	0.313	3.813	7.625	0.281	6	1/16	--
J_-_ _000/01P-07-1/Z		9.500							3.813	8.875		6		
J_-_ _000/01P-08-1/Z		10.750							5.063	10.125		6		
J_-_ _000/01P-09-1/Z		12.000							5.063	11.375		6		
J_-_ _000/01P-10-1/Z		13.250							6.313	12.625		6		

02P SIDE PORT

PART NO.	A	B	C	D	E	F	G	H	J	K	L	M	Q	R
J_-_ _000/02P-02-1/Z		3.625							--	3.000		4		
J_-_ _000/02P-03-1/Z		5.000							--	4.375		4		
J_-_ _000/02P-04-1/Z		6.375							--	5.750		4		
J_-_ _000/02P-05-1/Z		7.750							--	7.125		4		
J_-_ _000/02P-06-1/Z	1.500	9.125	0.750	1.125	1.375	0.250	1.000	0.313	4.250	8.500	0.281	6	1/8	--
J_-_ _000/02P-07-1/Z		10.500							4.250	9.875		6		
J_-_ _000/02P-08-1/Z		11.875							5.625	11.250		6		
J_-_ _000/02P-09-1/Z		13.250							5.625	12.625		6		
J_-_ _000/02P-10-1/Z		14.625							7.000	14.000		6		

04_ SIDE PORT

PART NO.	A	B	C	D	E	F	G	H	J	K	L	M	Q	R
J_-_ _000/04_-02-1/Z		3.875							--	3.250		4		
J_-_ _000/04_-03-1/Z		5.625							--	5.000		4		
J_-_ _000/04_-04-1/Z		7.375							--	6.750		4		
J_-_ _000/04_-05-1/Z		9.125							--	8.500		4		
J_-_ _000/04_-06-1/Z	1.750	10.875	0.875	1.063	1.750	0.250	1.250	0.313	5.125	10.250	0.281	6	1/4	-4
J_-_ _000/04_-07-1/Z		12.625							5.125	12.000		6		
J_-_ _000/04_-08-1/Z		14.375							6.875	13.750		6		
J_-_ _000/04_-09-1/Z		16.125							6.875	15.500		6		
J_-_ _000/04_-10-1/Z		17.875							8.625	17.250		6		

06_ SIDE PORT

PART NO.	A	B	C	D	E	F	G	H	J	K	L	M	Q	R
J_-_ _000/06_-02-1/Z	1.750	5.000	0.875	1.500	2.000	0.250	1.250	0.313	--	4.375	0.281	4	3/8	-6
J_-_ _000/06_-03-1/Z		7.000							--	6.375		4		
J_-_ _000/06_-04-1/Z		9.000							--	8.375		4		
J_-_ _000/06_-05-1/Z		11.000							--	10.375		4		
J_-_ _000/06_-06-1/Z		13.000							6.188	12.375		6		
J_-_ _000/06_-07-1/Z		15.000							6.188	14.375		6		
J_-_ _000/06_-08-1/Z		17.000							8.188	16.375		6		
J_-_ _000/06_-09-1/Z		19.000							8.188	18.375		6		
J_-_ _000/06_-10-1/Z		21.000							10.188	20.375		6		

08_ SIDE PORT

PART NO.	A	B	C	D	E	F	G	H	J	K	L	M	Q	R
J_-_ _000/08_-02-1/Z	2.000	5.375	1.000	1.500	2.375	0.250	1.500	0.313	--	4.750	0.281	4	1/2	-8
J_-_ _000/08_-03-1/Z		7.750							--	7.125		4		
J_-_ _000/08_-04-1/Z		10.125							--	9.500		4		
J_-_ _000/08_-05-1/Z		12.500							--	11.875		4		
J_-_ _000/08_-06-1/Z		14.875							7.125	14.250		6		
J_-_ _000/08_-07-1/Z		17.250							7.125	16.625		6		
J_-_ _000/08_-08-1/Z		19.625							9.500	19.000		6		
J_-_ _000/08_-09-1/Z		22.000							9.500	21.375		6		

12_ SIDE PORT

PART NO.	A	B	C	D	E	F	G	H	J	K	L	M	Q	R
J_-_ _000/12_-02-1/Z	2.500	6.875	1.250	1.813	3.250	0.280	1.940	0.375	--	6.125	0.344	4	3/4	-12
J_-_ _000/12_-03-1/Z		10.125							--	9.375		4		
J_-_ _000/12_-04-1/Z		13.375							--	12.625		4		
J_-_ _000/12_-05-1/Z		16.625							--	15.875		4		
J_-_ _000/12_-06-1/Z		19.875							9.563	19.125		6		
J_-_ _000/12_-07-1/Z		23.125							9.563	22.375		6		

16_ SIDE PORT

PART NO.	A	B	C	D	E	F	G	H	J	K	L	M	Q	R
J_-_ _000/16_-02-1/Z	3.000	7.750	1.500	2.000	3.750	0.344	2.312	0.375	--	7.000	0.406	4	1	-16
J_-_ _000/16_-03-1/Z		11.500							--	10.750		4		
J_-_ _000/16_-04-1/Z		15.250							--	14.500		4		
J_-_ _000/16_-05-1/Z		19.000							7.250	18.250		6		
J_-_ _000/16_-06-1/Z		22.750							11.000	22.000		6		

20_ SIDE PORT

PART NO.	A	B	C	D	E	F	G	H	J	K	L	M	Q	R
J_-_ _000/20_-02-1/Z	3.500	8.500	1.750	2.250	4.000	0.410	2.688	0.500	--	7.500	0.531	4	1-1/4	-20
J_-_ _000/20_-03-1/Z		12.500							--	11.500		4		
J_-_ _000/20_-04-1/Z		16.500							--	15.500		4		
J_-_ _000/20_-05-1/Z		20.500							7.750	19.500		6		

24_ SIDE PORT

PART NO.	A	B	C	D	E	F	G	H	J	K	L	M	Q	R
J_-_ _000/24_-02-1/Z	4.000	10.000	2.000	2.500	5.000	0.410	3.188	0.500	--	9.000	0.531	4	1-1/2	-24
J_-_ _000/24_-03-1/Z		15.000							--	14.000		4		
J_-_ _000/24_-04-1/Z		20.000							9.500	19.000		6		

magnaloy coupling company 501 Commerce Drive Alpena, MI 49707 989 356-2186
A Division of Douville Johnston Corporation Fax: 989 354-4190 http://www.magnaloy.com

SECTION 4

MAGNALOY HYDRAULIC RESERVOIRS

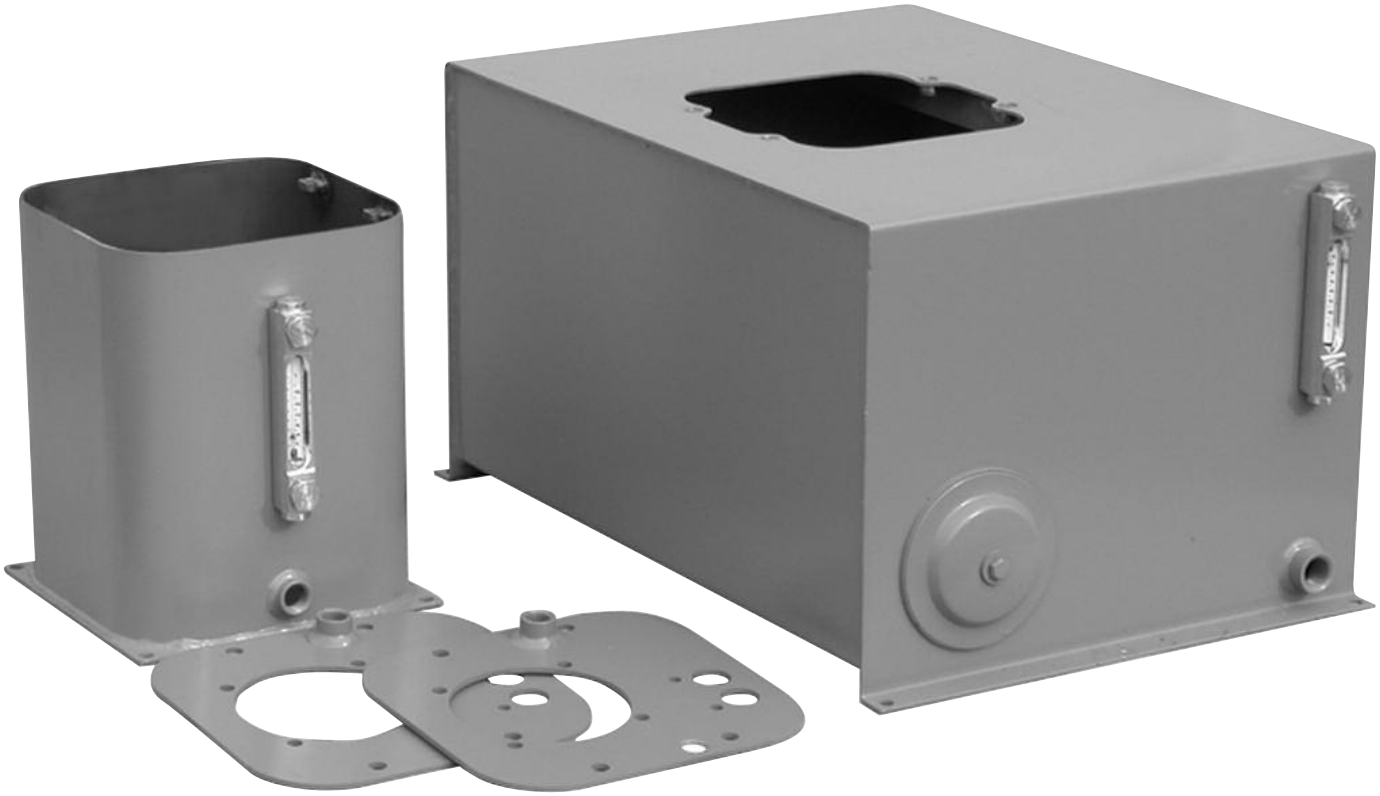

NOTE: *Due to Magnaloy's policy of continuous improvement, specificaitons are subject to change without notice. Check with the factory or our Web Site at www.magnaloy.com for the latest information.*

Quality.... Every Magnaloy reservoir is leak tested using a die penetrant, ensuring the integrity of each and every weld. In addition, every sharp edge and corner is deburred to help eliminate the risk of dangerous and costly injuries to assembly personnel. To insure a leakproof assembly, Magnaloy utilizes NPT Tapered Thread Fittings and Plugs for all Reservoir Drains.

Custom.... Whether a standard reservoir form our catalog, a hand sketch or DIN style, Magnaloy welcomes the opportunity to create a reservoir that will satisfy your application requirements. We specialize in pre-cut holes and/or special prepping of reservoirs reducing costly labor assembly time.

Value..... Our prices are competitive with all manufacturers of quality reservoirs. Magnaloy reservoirs arrive clean and ready to assemble. No costly labor required for cleanup. Other value added features include "one stop shopping" resulting in savings from fewer issued checks, purchase orders, correspondence and single source follow-up.

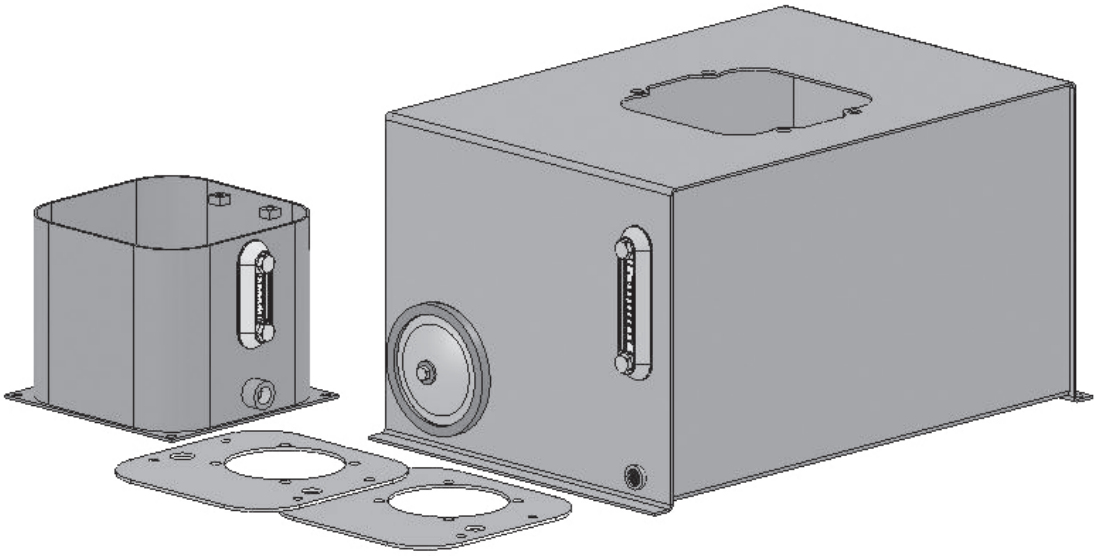

The Magnaloy tradition continues....

In the early planning stages of our reservoir line, a customer exclaimed, when learning of our new product, "if magnaloy is putting their name on it, that's good enough for me." Where other manufacturers dabble in expanding their product line, we take every new product very serious and ensure the magnaloy tradition of quality, value and support continues.

Other Magnaloy Reservoir Necessities....

Magnaloy offers a full line of Accessory Products for your reservoir. These include Filler Breather Caps, Adapters, Mounting Flanges, Screens, Suction Strainers, Spin-on and Tank Top Filters, Liquid Level Gauges and other products. See Magnaloy's complete line of accessory items in our Accessory Products Catalog or visit us at ***www.magnaloy.com***.

magnaloy coupling company *501 Commerce Drive Alpena, MI 49707* ***989 356-2186***
A Division of Douville Johnston Corporation *Fax: 989 354-4190* *http://www.magnaloy.com*

Vertical ECONO Reservoirs

Magnaloy Coupling Company's line of reservoirs begins with the Econo Series. These reservoirs are available in 2, 3, 5, 8, 10, 14, 20 and 25 gallon capacities. Each reservoir includes our Sight Level Gauge w/Temperature Readout, NPT Tank Drain, cutout and tapped holes for Reservoir Cover Plate (ordered separately), 6" Steel End Cover (on 8 gallon and larger), Primer Coated Exterior and Rust Inhibitor Coated Interior. All edges are de-burred for safe handling.

RVP02, RVP03 and RVP05 Econo Reservoirs:

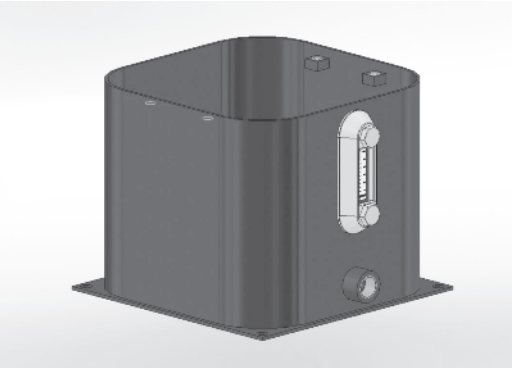

Features:

1 - 3/8-16 Cover Mounting Nuts
2 - Magnaloy Sight Level Gauge w/temp *
3 - 1/2" NPT Drain
4 - Neoprene Gasket for Cover Plate Seal **
Primer Coated Exterior
Rust Inhibitor Coated Interior

* Sight Level Gauge:
2 gallon - 3" Gauge (SLLG-03T-C)
3 & 5 gallon - 5" Gauge (SLLG-05T-C)
** Cover Plate is ordered as a separate item, see page 110 for specifications

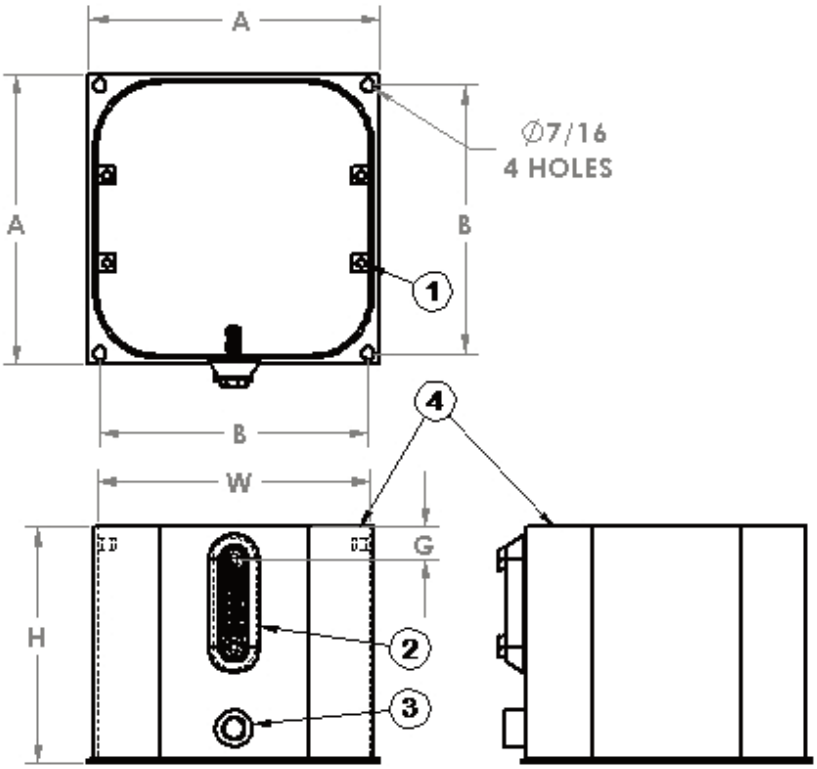

Part Number	A	B	G	H	W
RVP02	10.00	9.25	1.13	8.00	9.38
RVP03	10.00	9.25	2.50	12.00	9.38
RVP05	10.00	9.25	1.50	16.00	9.38

NOTE: *Due to Magnaloy's policy of continuous improvement, specifications are subject to change without notice.*

magnaloy coupling company *501 Commerce Drive Alpena, MI 49707* ***989 356-2186***
A Division of Douville Johnston Corporation *Fax: 989 354-4190* *http://www.magnaloy.com*

RVP08, RVP10 and RVP14 Econo Reservoirs:

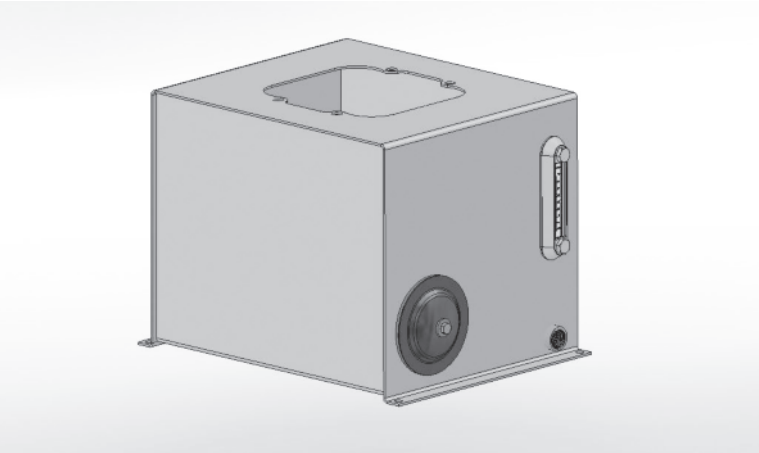

Features:

1 - 3/8-16 Cover Mounting Nuts
2 - Magnaloy 5" Sight Level Gauge w/temp (SLLG-05T-C)
3 - 3/4" NPT Drain
4 - Neoprene Gasket for Cover Plate Seal *
5 - 6" Steel Clean-out Cover (REC06)
Primer Coated Exterior
Rust Inhibitor Coated Interior

* Cover Plate is ordered as a separate item, see page 110 for specifications

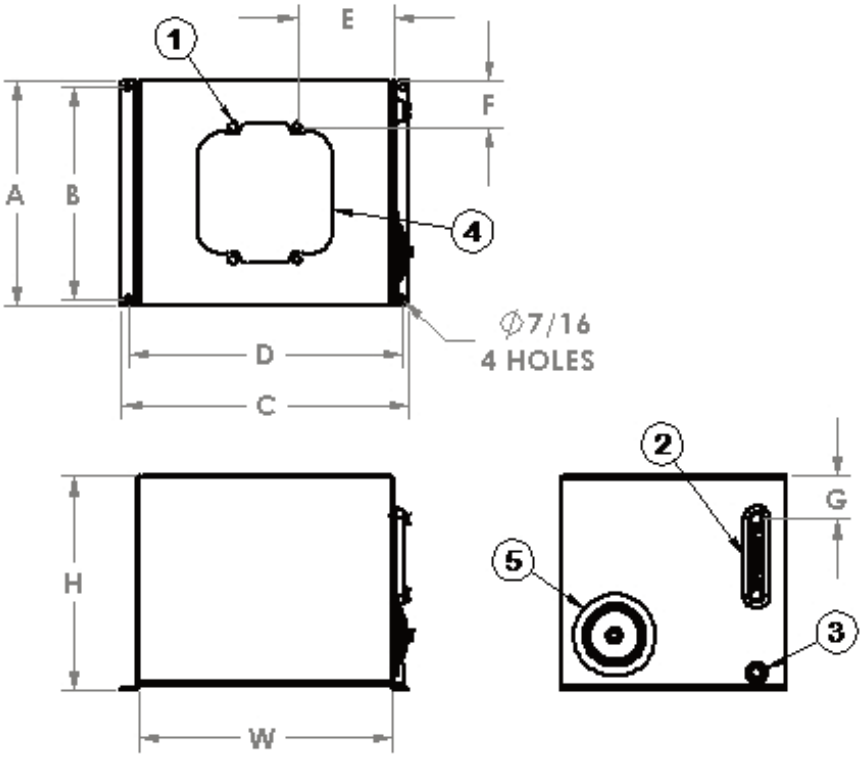

Part Number	A	B	C	D	E	F	G	H	W
RVP08	12.00	11.13	14.25	13.38	5.06	1.63	3.13	18.13	12.00
RVP10	15.00	14.13	19.00	18.13	6.25	2.63	2.81	13.94	16.75
RVP14	12.00	11.13	20.25	19.38	6.88	1.63	2.88	20.13	18.00

NOTE: *Due to Magnaloy's policy of continuous improvement, specifications are subject to change without notice.*

magnaloy coupling company *501 Commerce Drive Alpena, MI 49707* ***989 356-2186***
A Division of Douville Johnston Corporation *Fax: 989 354-4190* *http://www.magnaloy.com*

RVP20 and RVP25 Econo Reservoirs:

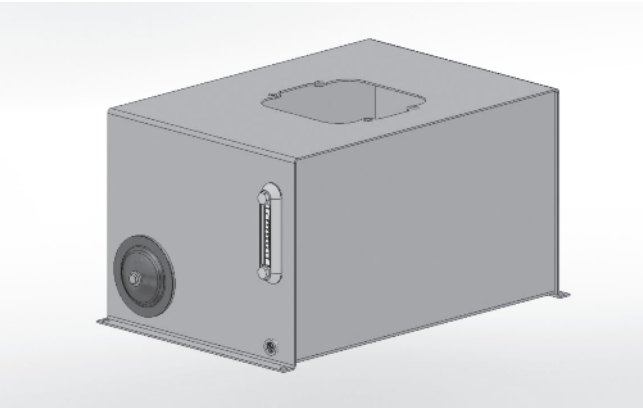

Features:

1 - 3/8-16 Cover Mounting Nuts
2 - Magnaloy 5" Sight Level Gauge w/temp (SLLG-05T-C)
3 - 3/4" NPT Drain
4 - Neoprene Gasket for Cover Plate Seal *
5 - 6" Steel Clean-out Cover (REC06)
6 - Tank Top Stiffener for rigidity and noise reduction
Primer Coated Exterior
Rust Inhibitor Coated Interior

* Cover Plate is ordered as a separate item, see page 110 for specifications

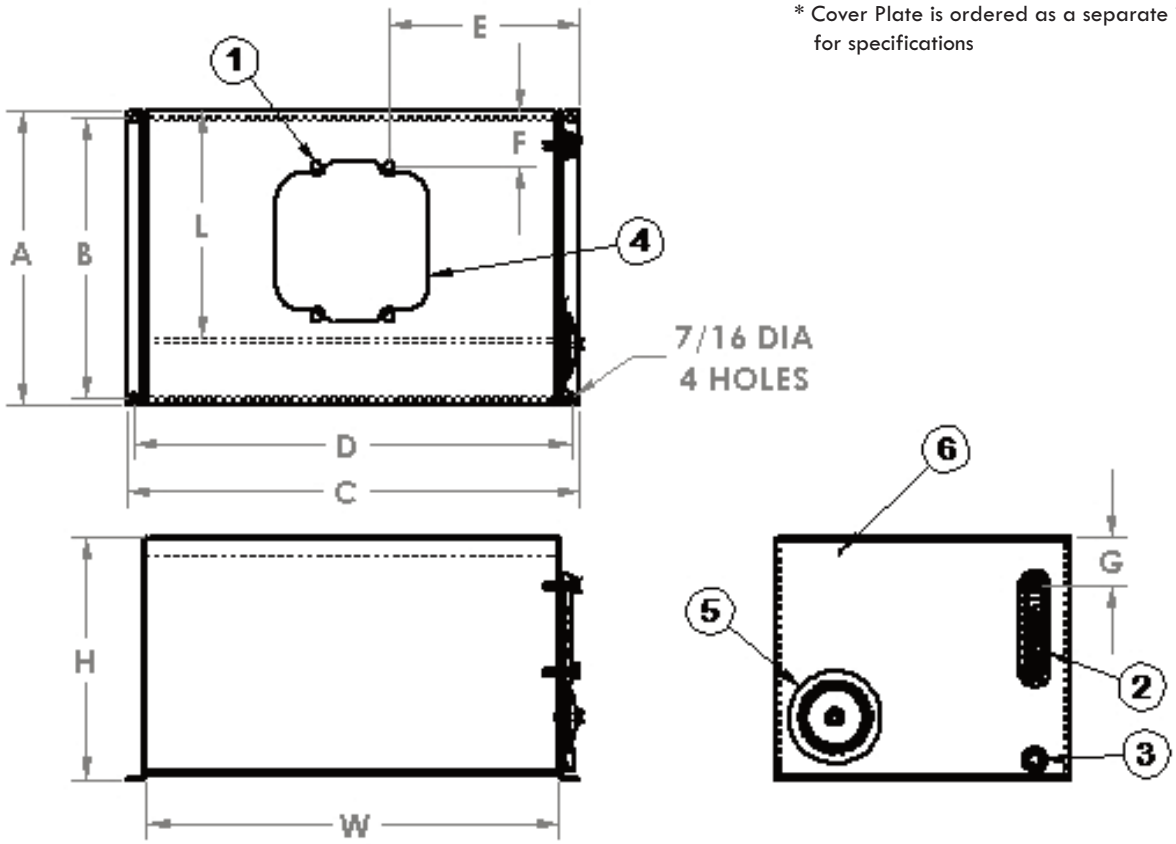

Part Number	A	B	C	D	E	F	G	H	L	W
RVP20	18.00	17.13	26.25	25.38	10	3.25	1.63	14.25	13.00	24.00
RVP25	18.00	17.13	26.25	25.38	10	3	5.63	18.13	12.25	24.00

NOTE: *Due to Magnaloy's policy of continuous improvement, specifications are subject to change without notice.*

magnaloy coupling company *501 Commerce Drive Alpena, MI 49707* ***989 356-2186***
A Division of Douville Johnston Corporation *Fax: 989 354-4190* *http://www.magnaloy.com*

RVPT-1, RVPT-2, RVPT-3 and RVPT-4 Cover Plates:

Magnaloy offer 4 choices of Cover Plates for the Econo Series of Reservoirs to meet your specific requirements. Each Cover Plate will fit any of the Econo Reservoirs. All Cover Plates are formed from 7 gauge sheet metal.

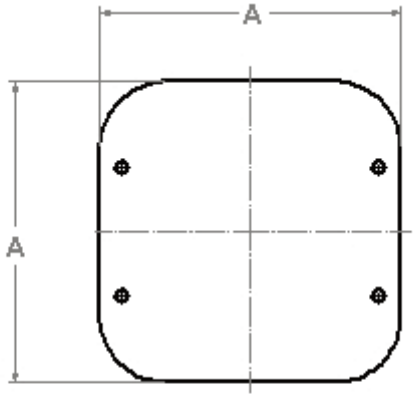

RVPT-1 Cover Plate
Blank Cover

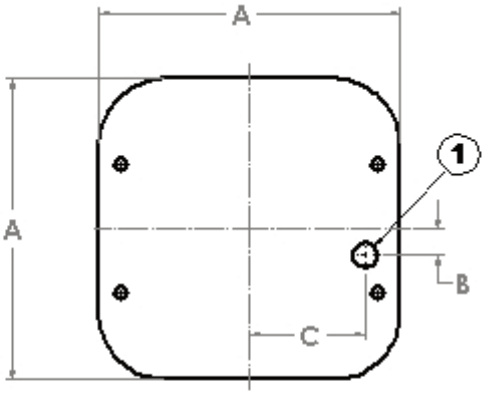

RVPT-2 Cover Plate
Includes: 1 - Filler Breather Cutout(1/2" NPT)

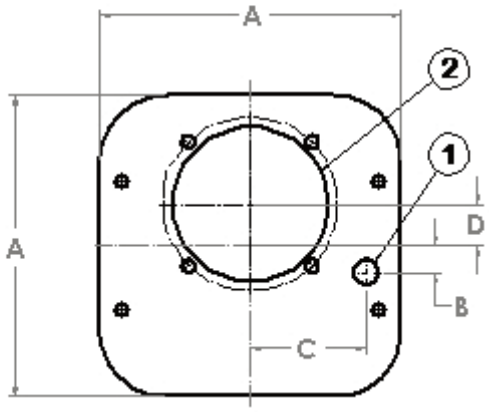

RVPT-3 Cover Plate
Includes: 1 - Filler Breather Cutout(1/2" NPT)
2 - 056C Mount Cutout

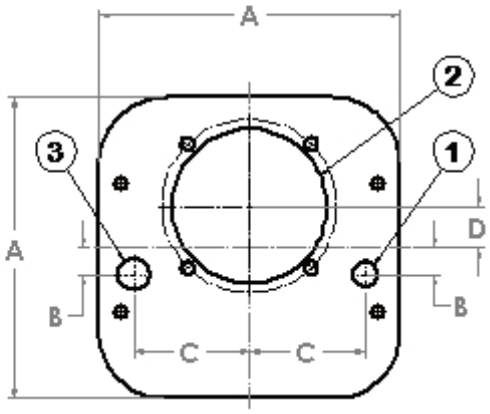

RVPT-4 Cover Plate
Includes: 1 - Filler Breather Cutout(1/2" NPT)
2 - 056C Mount Cutout
3 - 1/2" NPT Connector

Part Number	A	B	C	D
RVPT-1	10.11	N/A	N/A	N/A
RVPT-2	10.11	.88	3.88	N/A
RVPT-3	10.11	.88	3.88	1.41
RVPT-4	10.11	.88	3.88	1.41

NOTE: *Reservoirs and Cover Plates are ordered separately. Order by the specific part number for the Reservoir and Cover Plate.*

NOTE: *Due to Magnaloy's policy of continuous improvement, specifications are subject to change without notice.*

magnaloy coupling company *501 Commerce Drive Alpena, MI 49707* ***989 356-2186***
A Division of Douville Johnston Corporation *Fax: 989 354-4190* *http://www.magnaloy.com*

RVSxx-x Series Reservoirs:

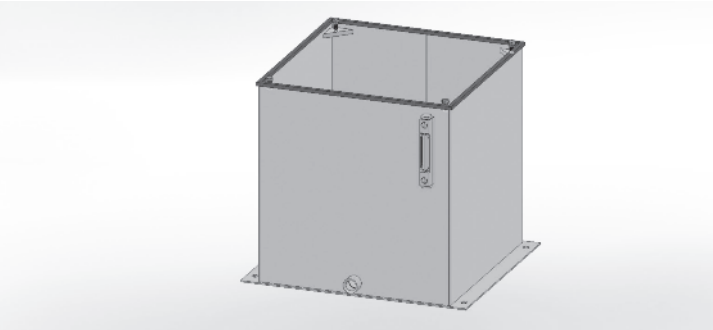

Size	Body Form	Bottom Form
5 gal	11 ga	11 ga
10 gal	11 ga	11 ga
20 gal	11 ga	11 ga
30 gal	11 ga	11 ga
40 gal	11 ga	11 ga

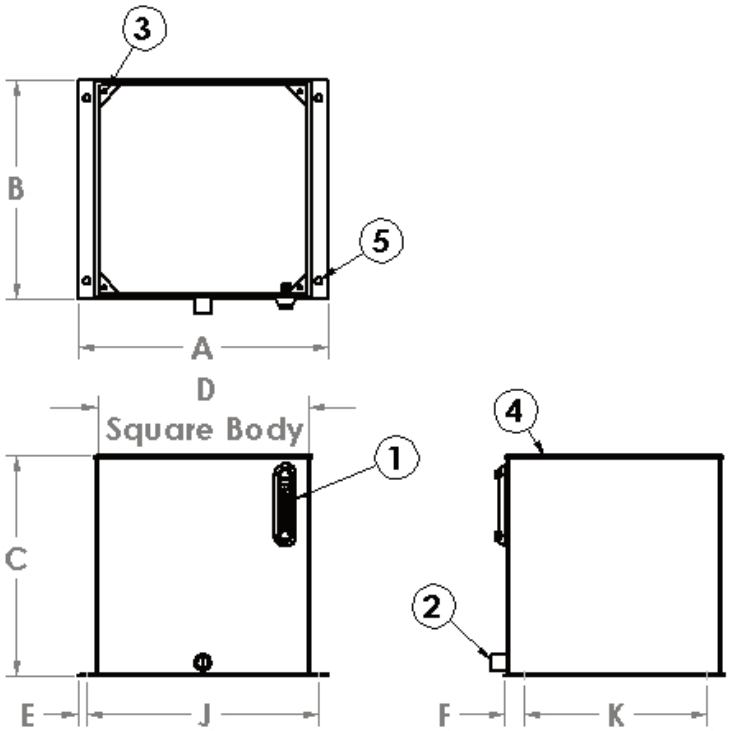

Includes:

1- Sight Level Gauge (front mount) (SLLG-05T-C)
2 - 1/2" NPT Tank Drain
3 - (4) 3/8-16 Threaded Gussets for Cover Mounting Bolts
4 - "U" Gasket for Top Seal
5 - 9/16" Dia. Holes on Bottom Flange for Tank Mounting
Choice of Top - ordered separately, see page 109
Primer Coated Exterior
Rust Inhibitor Coated Interior

Part Number	Series	Capacity Gallons	Reservoir Dimensions (Inches)							
			A	B	C	D	E	F	J	K
RVS05-1	1	5	14.5	12.5	10	12	0.5	1.25	13.5	10
RVS10A-1	1	10	14.5	12.5	19.69	12	0.5	1.25	13.5	10
RVS10B-2	2	10	19	16.5	11.75	16	0.75	1.25	17.5	14
RVS10-2	2	10	19	16.5	15	16	0.75	1.25	17.5	14
RVS20-2	2	20	19	16.5	23.69	16	0.75	1.25	17.5	14
RVS20-3	3	20	20.5	18	18	17.5	0.75	1.5	19	15
RVS30-2	2	30	19	16.5	35.69	16	0.75	1.25	17.5	14
RVS30-3	3	30	20.5	18	26	17.5	0.75	1.5	19	15
RVS40-3	3	40	20.5	18	34	17.5	0.75	1.5	19	15

NOTE: *Due to Magnaloy's policy of continuous improvement, specifications are subject to change without notice.*

RVS Series Reservoir Tops:

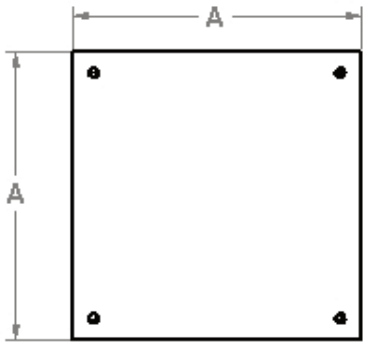

Blank Cover
Part Number RVSx-T-1

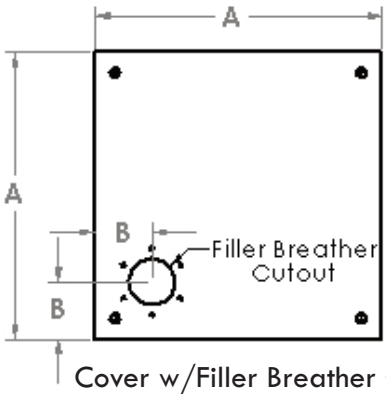

Cover w/Filler Breather Cutout
Part Number RVSx-T-2

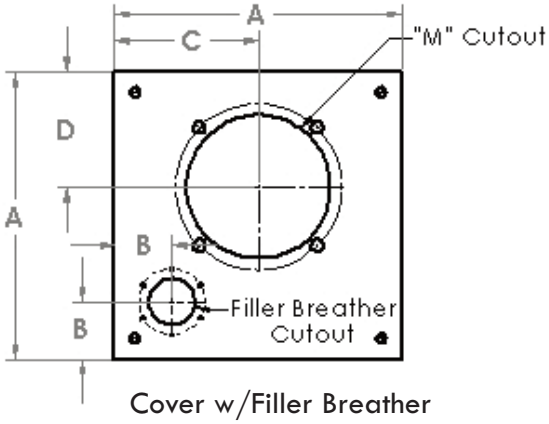

Cover w/Filler Breather
Cutout and Pump/Motor Mount Cutout
Part Number RVSx-T-3(4)/M

"M" Pump/Motor Mount Cutout Specifications

Code "M"	Pump/Motor Mount Size*	M Dia.	Hole Dia	Bolt Circle
A	056 option A	5.19	7/16	5.88
B	056 option B	5.00	7/16	5.88
C	182 option A	6.25	17/32	7.25
D	182 option B	9.13	17/32	10.25

** See Magnaloy's Pump/Motor Mounts, page 17 for more details*

Vertical Reservoir Top	Fits Reservoir Series	Reservoir Dimensions (Inches)				Pump/Motor Mount Code
		A	B	C	D	M
RVS1-T-1	1	12.5				
RVS1-T-2	1	12.5	2.5			
RVS1-T-3/M	1	12.5	2.5	6.25	5	A or B
RVS1-T-4/M	1	12.5	2.5	6.25	5	C
RVS2-T-1	2	16.5				
RVS2-T-2	2	16.5	2.5			
RVS2-T-3/M	2	16.5	2.5	8.25	5.5	A or B
RVS2-T-4/M	2	16.5	2.5	8.25	6.25	C or D
RVS3-T-1	3	18				
RVS3-T-2	3	18	2.5			
RVS3-T-3/M	3	18	2.5	9	5.5	A or B
RVS3-T-4/M	3	18	2.5	9	6.25	C or D

***NOTE:** Due to Magnaloy's policy of continuous improvement, specifications are subject to change without notice.*

magnaloy coupling company *501 Commerce Drive Alpena, MI 49707* ***989 356-2186***
A Division of Douville Johnston Corporation *Fax: 989 354-4190* *http://www.magnaloy.com*

RJICxx-FT* JIC Series Reservoirs:

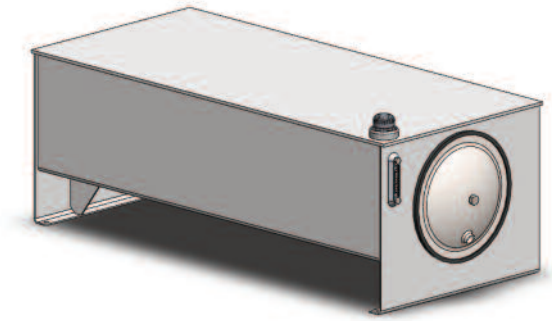

Size	Ends	Form	Top	Baffle
10 gal	7 ga	11 ga	7 ga	12 ga
15 gal	7 ga	11 ga	7 ga	12 ga
20 gal	7 ga	11 ga	7 ga	12 ga
30 gal	7 ga	11 ga	7 ga	12 ga
40 gal	7 ga	11 ga	7 ga	12 ga
50 gal	7 ga	11 ga	7 ga	12 ga
60 gal	7 ga	11 ga	1/4”	12 ga
80 gal	7 ga	11 ga	3/8”	12 ga
100 gal	7 ga	11 ga	3/8”	12 ga
120 gal	3/8”	11 ga	3/8”	12 ga
150 gal	3/8”	11 ga	3/8”	12 ga
200 gal	3/8”	7 ga	3/8”	12 ga

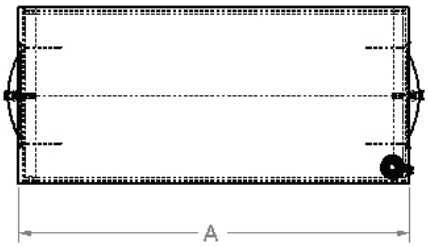

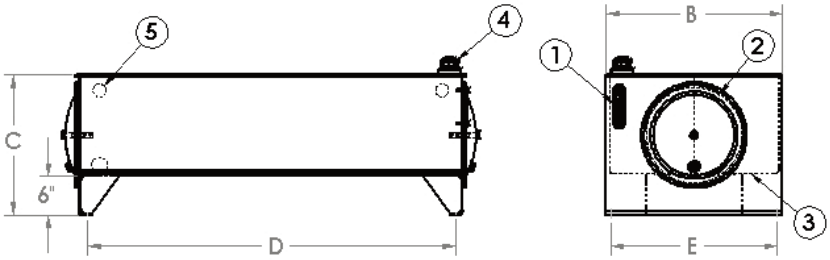

Includes:

1 - Sight Level Gauge (front mount) (SLLG-05T-C)
2 - End Cover w/3/4” NPT Drain
End Cover w/out Drain (opposite end)
3 - Sloped Bottom
4 - Filler Breather Cap and Riser (FB-H008)
5 - Baffle w/Circulation Cutout
Primer Coated Exterior
Rust Inhibitor Coated Interior

Part Number	Capacity Gallons	Reservoir Dimensions (Inches)					End Cover
		A	B	C	D	E	
RJIC010-FT	10	22	18	19	18.25	16.5	12”
RJIC015-FT	15	26	18	19	22.25	16.5	12”
RJIC020-FT	20	30	18	19	26.25	16.5	12”
RJIC030-FT	30	36	24	19.38	32.25	22.5	12”
RJIC040-FT	40	36	24	21	32.25	22.5	12”
RJIC050-FT	50	36	24	23	32.25	22.5	16”
RJIC060-FT	60	48	27	20.69	44.25	25.5	16”
RJIC080-FT	80	60	27	21.5	56.25	25.5	16”
RJIC100-FT	100	60	27	23.5	56.25	25.5	16”
RJIC120-FT	120	60	30	27	56.25	28.5	16”
RJIC150-FT	150	60	30	31	56.25	28.5	16”
RJIC200-FT	200	72	36	29.38	68.25	34.5	18”

NOTE: *Couplings, both SAE & NPT can be installed per your specifications*

* *Also available with Removable Top (substitute RT for FT) and Removable Baffle (substitute RB for FT)*

NOTE: *Due to Magnaloy’s policy of continuous improvement, specifications are subject to change without notice.*

magnaloy coupling company *501 Commerce Drive Alpena, MI 49707* ***989 356-2186***
A Division of Douville Johnston Corporation *Fax: 989 354-4190* *http://www.magnaloy.com*

RLCxx-FT Series Reservoirs:

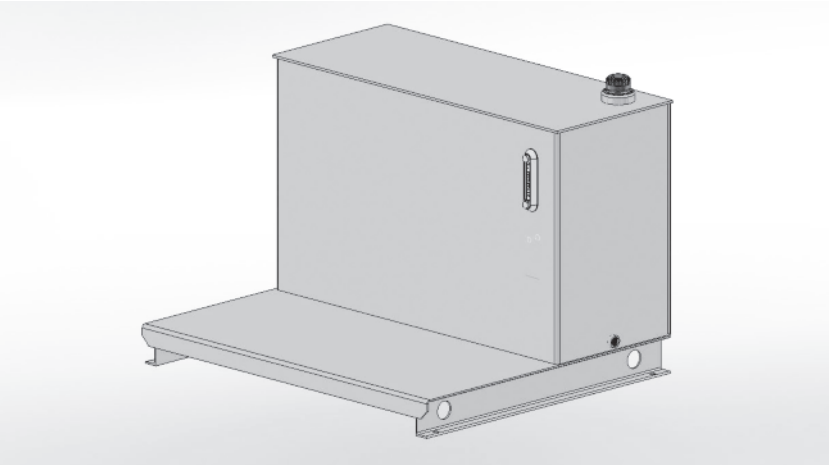

Size	Form	Top	Bottom	Baffle
10 gal	7 ga	1/4"	7 ga	11 ga
20 gal	7 ga	1/4"	7 ga	11 ga
30 gal	7 ga	1/4"	7 ga	11 ga
45 gal	7 ga	1/4"	7 ga	11 ga
60 gal	7 ga	1/4"	7 ga	11 ga
80 gal	7 ga	1/4"	3/8"	11 ga
100 gal	7 ga	1/4"	3/8"	11 ga
120 gal	7 ga	1/4"	3/8"	11 ga
150 gal	7 ga	1/4"	3/8"	11 ga
200 gal	7 ga	1/4"	3/8"	11 ga

Includes:

1- Sight Level Gauge (front mount) (SLLG-05T-C)
2 - Filler Breather Cap and Riser (FB-H008)
3 - Fixed Top (Welded)
4 - Clean-out Cover on Back Side
5 - Baffles w/Circulation Cutout
6 - 3/4" NPT Tank Drain
7 - Lifting Holes in Channel Ends
8 - 9/16 Dia Holes, 2 per Channel
9 - Optional Porch Sizes-consult factory
10 - Return Line Connection - "O" NPT
11 - Bottom Stiffener
Primer Coated Exterior
Rust Inhibitor Coated Interior

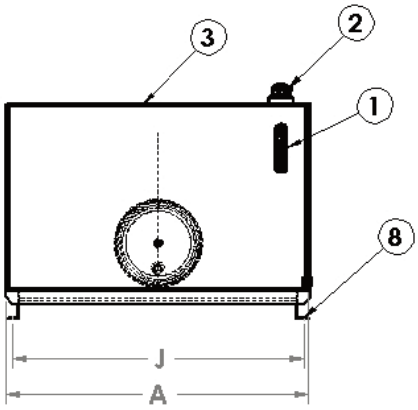

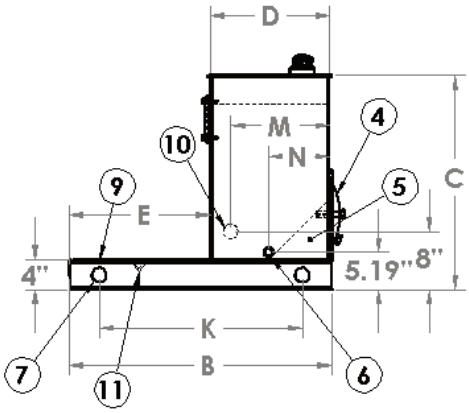

Part Number	Capacity Gallons	Reservoir Dimensions (Inches)							Return Connections			Cover Size
		A	B	C	D	E	J	K	M	N	O	
RLC010-FT	10	24	22	26.56	6.5	15.44	22.25	18	4.5	3.25	1/2"	12
RLC020-FT	20	36	27	26.56	7.5	19.44	34.25	23	5.5	3.75	1"	12
RLC030-FT	30	36	30	28.56	10.5	19.44	34.25	26	7.5	5.25	1 1/2"	12
RLC045-FT	45	42	36	29.56	12.5	23.44	40.25	32	9.5	6.25	1 1/2"	12
RLC060-FT	60	42	36	29.56	16.5	19.44	40.25	32	13.5	8.25	1 1/2"	12
RLC080-FT	80	48	42	30.56	18.5	23.5	46.25	38	15.5	9.25	1 1/2"	16
RLC100-FT	100	50	47	31.56	21.5	25.5	48.25	43	18.5	10.75	2"	16
RLC120-FT	120	52	50	32.56	22.5	27.5	50.25	46	19.5	11.25	2"	16
RLC150-FT	150	60	50	33.56	22.5	27.5	58.25	46	19.5	11.25	2"	16
RLC200-FT	200	60	57	40.56	25.5	31.5	58.25	53	22.5	12.75	2"	16

NOTE: *Due to Magnaloy's policy of continuous improvement, specifications are subject to change without notice.*

magnaloy coupling company *501 Commerce Drive Alpena, MI 49707* ***989 356-2186***
A Division of Douville Johnston Corporation *Fax: 989 354-4190* *http://www.magnaloy.com*

RLPxx-RT Series Reservoirs:

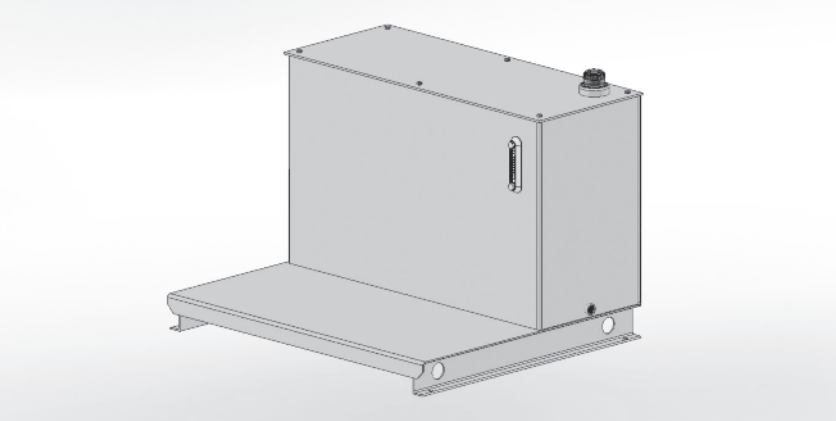

Size	Form	Top	Bottom	Baffle
10 gal	7 ga	1/4"	7 ga	11 ga
20 gal	7 ga	1/4"	7 ga	11 ga
30 gal	7 ga	1/4"	7 ga	11 ga
45 gal	7 ga	1/4"	7 ga	11 ga
60 gal	7 ga	1/4"	7 ga	11 ga
80 gal	7 ga	1/4"	3/8"	11 ga
100 gal	7 ga	1/4"	3/8"	11 ga
120 gal	7 ga	1/4"	3/8"	11 ga
150 gal	7 ga	1/4"	3/8"	11 ga
200 gal	7 ga	1/4"	3/8"	11 ga

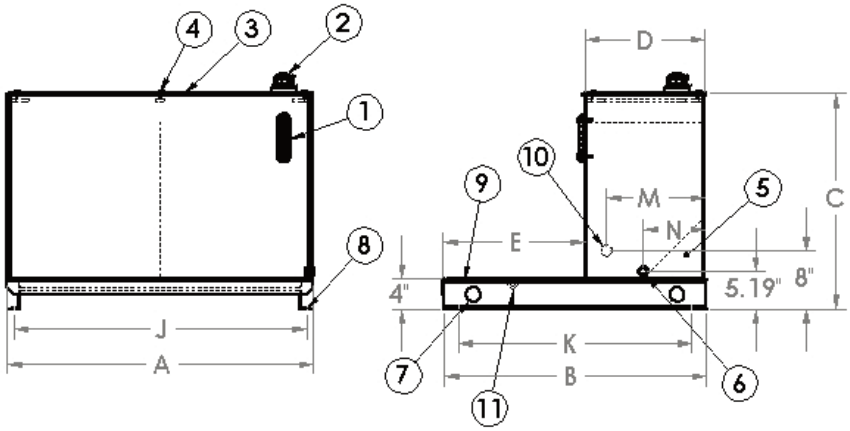

Includes:

1- Sight Level Gauge (front mount) (SLLG-05T-C)
2 - Filler Breather Cap and Riser (FB-H008)
3 - Removable Top w/Gasket
4 - 6 Bolts to Secure Top
5 - Baffles w/Circulation Cutout
6 - 3/4" NPT Tank Drain
7 - Lifting Holes in Channel Ends
8 - 9/16 Dia Holes, 2 per Channel
9 - Optional Porch Sizes - consult factory
10 - Return Line Connection - "O" NPT
11 - Bottom Stiffener
Primer Coated Exterior
Rust Inhibitor Coated Interior

Part Number	Capacity Gallons	Reservoir Dimensions (Inches)							Return Connections		
		A	B	C	D	E	J	K	M	N	O
RLP010-RT	10	24	22	26.56	6.5	15.44	22.25	18	4.5	3.25	1/2"
RLP020-RT	20	36	27	26.56	7.5	19.44	34.25	23	5.5	3.75	1"
RLP030-RT	30	36	30	28.56	10.5	19.44	34.25	26	7.5	5.25	1 1/2"
RLP045-RT	45	42	36	29.56	12.5	23.44	40.25	32	9.5	6.25	1 1/2"
RLP060-RT	60	42	36	29.56	16.5	19.44	40.25	32	13.5	8.25	1 1/2"
RLP080-RT	80	48	42	30.56	18.5	23.5	46.25	38	15.5	9.25	1 1/2"
RLP100-RT	100	50	47	31.56	21.5	25.5	48.25	43	18.5	10.75	2"
RLP120-RT	120	52	50	32.56	22.5	27.5	50.25	46	19.5	11.25	2"
RLP150-RT	150	60	50	33.56	22.5	27.5	58.25	46	19.5	11.25	2"
RLP200-RT	200	60	57	40.56	25.5	31.5	58.25	53	22.5	12.75	2"

NOTE: *Due to Magnaloy's policy of continuous improvement, specifications are subject to change without notice.*

magnaloy coupling company *501 Commerce Drive Alpena, MI 49707* ***989 356-2186***
A Division of Douville Johnston Corporation *Fax: 989 354-4190* *http://www.magnaloy.com*

RLPxx-HT Series Reservoirs:

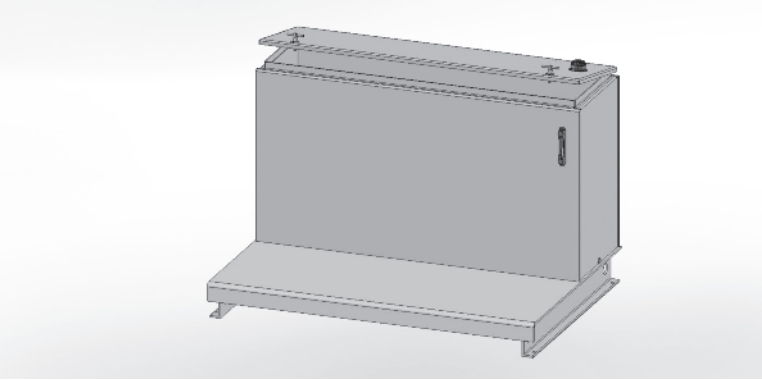

Size	Form	Top	Bottom	Baffle
10 gal	7 ga	11 ga	7 ga	11 ga
20 gal	7 ga	11 ga	7 ga	11 ga
30 gal	7 ga	11 ga	7 ga	11 ga
45 gal	7 ga	11 ga	7 ga	11 ga
60 gal	7 ga	11 ga	7 ga	11 ga
80 gal	7 ga	11 ga	3/8”	11 ga
100 gal	7 ga	11 ga	3/8”	11 ga
120 gal	7 ga	11 ga	3/8”	11 ga
150 gal	7 ga	11 ga	3/8”	11 ga
200 gal	7 ga	11 ga	3/8”	11 ga

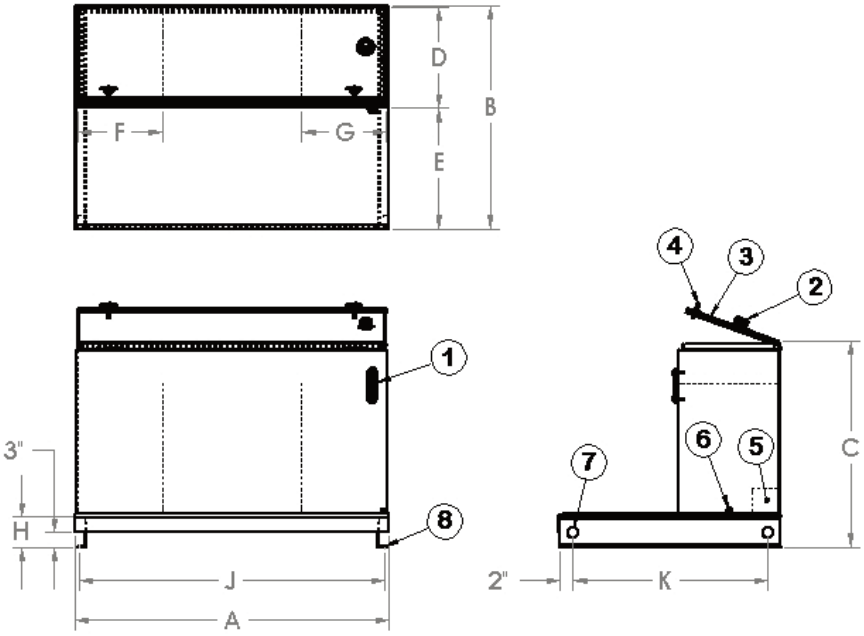

Includes:

1- Sight Level Gauge (front mount) (SLLG-05T-C)
2 - Filler Breather Cap (FB-H008)
3 - Hinged Top w/Gasket
4 - T-Handles to Secure Top
5 - Baffles w/Circulation Cutout
6 - 3/4” NPT Tank Drain
7 - Lifting Holes in Channel Ends
8 - 9/16 Dia Holes, 2 per Channel
Primer Coated Exterior
Rust Inhibitor Coated Interior

Part Number	Capacity Gallons	Reservoir Dimensions (Inches)									
		A	B	C	D	E	F	G	H	J	K
RLP010-HT	10	24	23.38	23.88	11.13	12.25	N/A	11	6.18	22.25	19
RLP020-HT	20	30	27.38	25.88	13.5	13.88	N/A	12	6.18	28.25	23
RLP030-HT	30	36	30.38	29.88	13.75	16.63	N/A	12	6.18	34.25	26
RLP045-HT	45	54	31.38	29.88	13.75	17.63	12	12	6.18	52.25	27
RLP060-HT	60	48	37.38	35.88	16.75	20.63	N/A	16	6.18	46.25	33
RLP080-HT	80	66	38.56	36.06	16.38	22	16	16	6.38	64.25	34
RLP100-HT	100	60	42.56	39.06	19.38	23	N/A	16	6.38	58.25	38
RLP120-HT	120	72	42.56	39.06	19.38	23	16	16	6.38	70.25	38
RLP150-HT	150	72	50.56	39.06	25.38	25	N/A	16	6.38	70.25	46
RLP200-HT	200	84	51.56	42.06	25.38	26	16	16	6.38	82.25	47

NOTE: *Due to Magnaloy’s policy of continuous improvement, specifications are subject to change without notice.*

magnaloy coupling company *501 Commerce Drive Alpena, MI 49707* ***989 356-2186***
A Division of Douville Johnston Corporation *Fax: 989 354-4190* *http://www.magnaloy.com*

RLPxx-PHT Series Reservoirs:

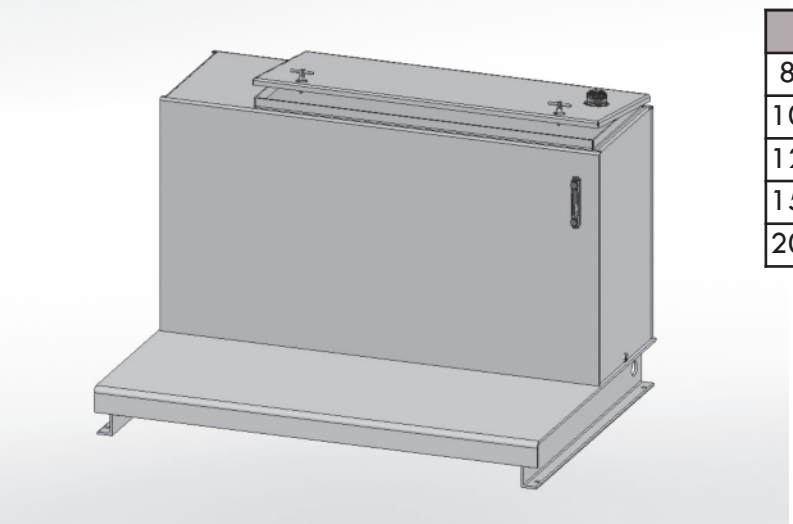

Size	Form	Top	Lid	Bottom	Baffle
80 gal	7 ga	7 ga	11 ga	3/8”	11 ga
100 gal	7 ga	7 ga	11 ga	3/8”	11 ga
120 gal	7 ga	7 ga	11 ga	3/8”	11 ga
150 gal	7 ga	7 ga	11 ga	3/8”	11 ga
200 gal	7 ga	7 ga	11 ga	3/8”	11 ga

Includes:

1- Sight Level Gauge (front mount) (SLLG-05T-C)
2 - Filler Breather Cap (FB-H008)
3 - Partial Hinged Top w/Gasket
4 - T-Handles to Secure Top
5 - Baffles w/Circulation Cutout
6 - 3/4” NPT Tank Drain
7 - Lifting Holes in Channel Ends
8 - 9/16 Dia Holes, 2 per Channel
9 - Upper Porch for filter mounting
Primer Coated Exterior
Rust Inhibitor Coated Interior

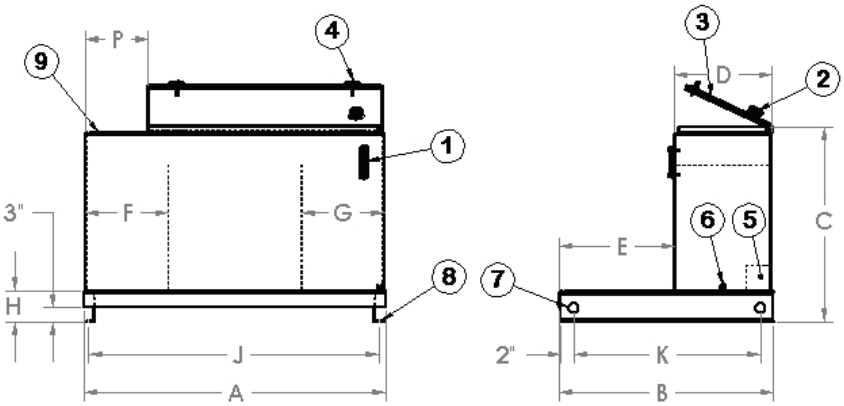

Part Number	Capacity Gallons	Reservoir Dimensions (Inches)										
		A	B	C	D	E	F	G	H	J	K	P
RLP080-PHT	80	60	38.56	36.06	13.38	25	16	16	6.38	58.25	34	12
RLP100-PHT	100	60	42.56	36.06	16.38	26	16	16	6.38	58.25	38	12
RLP120-PHT	120	72	42.56	36.06	16.38	26	16	16	6.38	70.25	38	12
RLP150-PHT	150	72	50.56	39.06	18.38	32	16	16	6.38	70.25	46	12
RLP200-PHT	200	84	51.56	42.06	18.38	33	24	16	6.38	82.25	47	16

NOTE: *Due to Magnaloy’s policy of continuous improvement, specifications are subject to change without notice.*

magnaloy coupling company *501 Commerce Drive Alpena, MI 49707* ***989 356-2186***
A Division of Douville Johnston Corporation *Fax: 989 354-4190* *http://www.magnaloy.com*

RHCxx-FT Series Reservoirs:

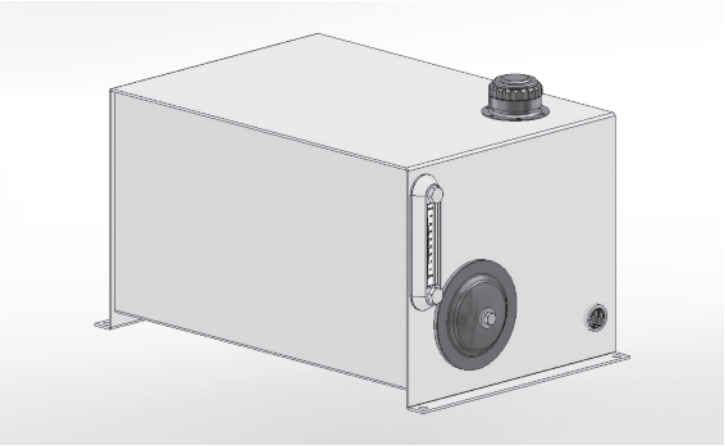

Size	Ends	Form	Top	Baffle
ALL	11 ga	11 ga	11 ga	11 ga

Includes:

1- Sight Level Gauge (front mount) (SLLG-05T-C)
2 - Filler Breather Cap (FB-H008)
Included, **Cutout Hole Not Provided**
3 - 3/4" NPT Tank Drain
4 - End Cover - 10, 20, 30 Gal Only
5 - End Cover - 10, 20, 30 & 40 Gal
6 - End Cover - 40 Gal Only
End Cover - 60 Gal Only - single 12" cover centered on each end.
7 - Top Stiffeners - except 10 Gal
8 - 7/16" Dia. Holes on Bottom Flange for Tank Mounting
9 - Baffle w/cutout for circulation
Primer Coated Exterior
Rust Inhibitor Coated Interior

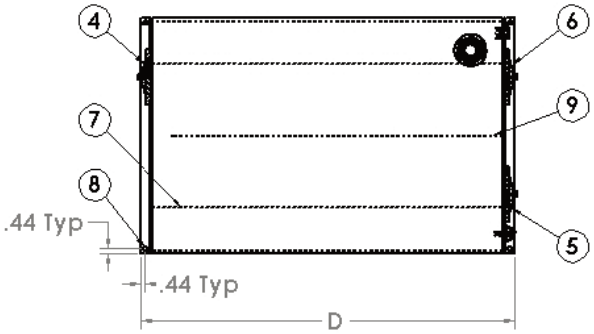

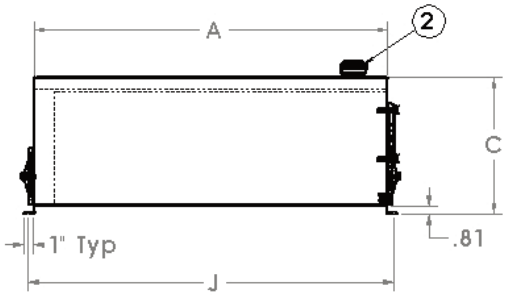

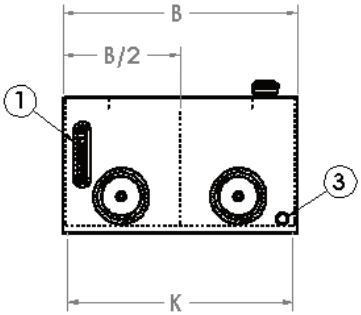

Part Number	Capacity Gallons	Reservoir Dimensions (Inches)					
		A	B	C	D	J	K
RHC010-FT	10	20	14	12	22.25	21.38	13.13
RHC020-FT	20	24	18	14	26.25	25.38	17.13
RHC030-FT	30	36	18	14	38.25	37.38	17.13
RHC040-FT	40	36	24	14	38.25	37.38	23.13
RHC060-FT	60	40	30	16.63	42.38	41.50	29.13

NOTE: *Due to Magnaloy's policy of continuous improvement, specifications are subject to change without notice.*

magnaloy coupling company *501 Commerce Drive Alpena, MI 49707* ***989 356-2186***
A Division of Douville Johnston Corporation *Fax: 989 354-4190* *http://www.magnaloy.com*

RHPxx-RT Series Reservoirs:

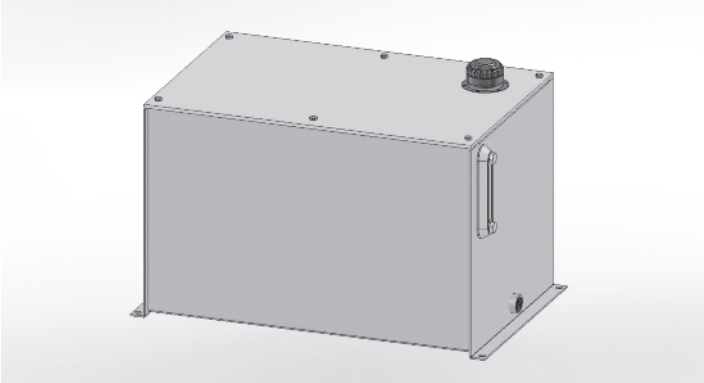

Size	Ends	Form	Top	Baffle
10 gal	11 ga	11 ga	1/4"	11 ga
20 gal	11 ga	11 ga	1/4"	11 ga
30 gal	11 ga	11 ga	1/4"	11 ga
40 gal	11 ga	11 ga	1/4"	11 ga

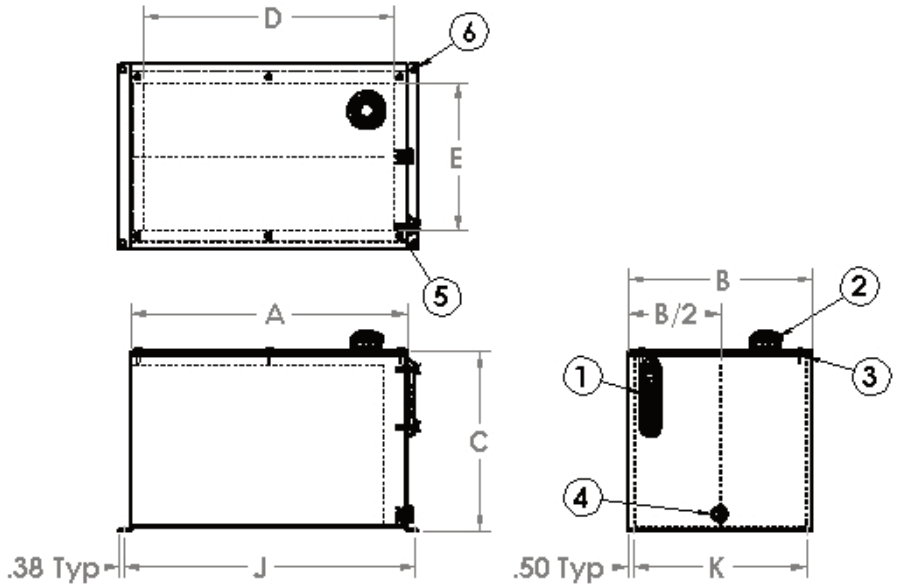

Includes:

1- Sight Level Gauge (front mount) (SLLG-05T-C)
2 - Filler Breather Cap (FB-H008) Included, **Cutout Hole Not Provided**
3 - Neoprene Foam Gasket Top Seal
4 - 3/4" NPT Tank Drain
5 - 6 Bolts to secure Top (1/4"-20)
6 - 1/2" Dia. Holes on Bottom Flange for Tank Mounting
Primer Coated Exterior
Rust Inhibitor Coated Interior

Part Number	Capacity Gallons	Reservoir Dimensions (Inches)						
		A	B	C	D	E	J	K
RHP010-RT	10	24	16	9.5	21.75	12.75	25.25	15
RHP020-RT	20	24	16	15.5	21.75	12.75	25.25	15
RHP030-RT	30	24	16	21.5	21.75	12.75	25.25	15
RHP040-RT	40	24	16	27.5	21.75	12.75	25.25	15

NOTE: *Due to Magnaloy's policy of continuous improvement, specifications are subject to change without notice.*

magnaloy coupling company *501 Commerce Drive Alpena, MI 49707* ***989 356-2186***
A Division of Douville Johnston Corporation *Fax: 989 354-4190* *http://www.magnaloy.com*

Drip Pans for RJIC Series Reservoirs

Fits Magnaloy RJIC Series Reservoirs and Stacking Modules:

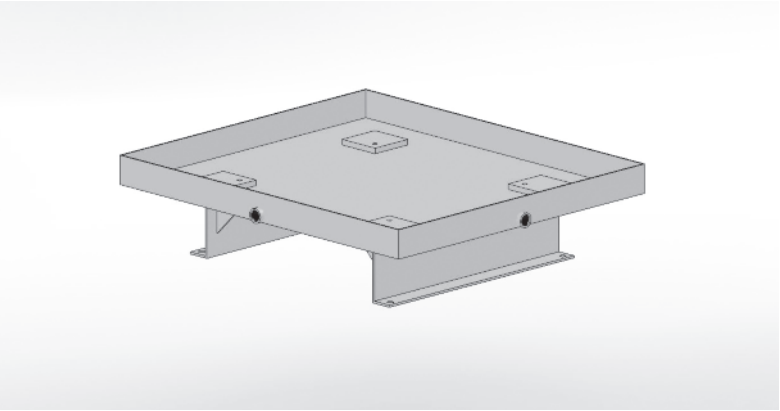

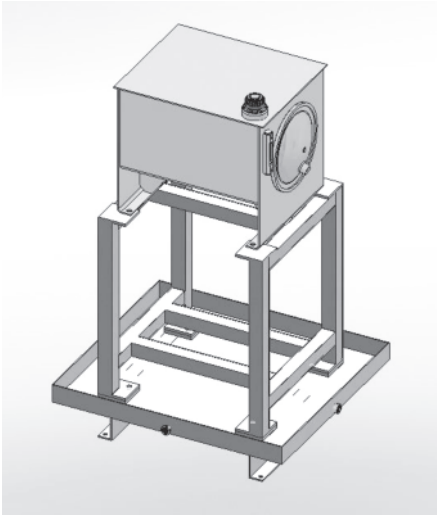

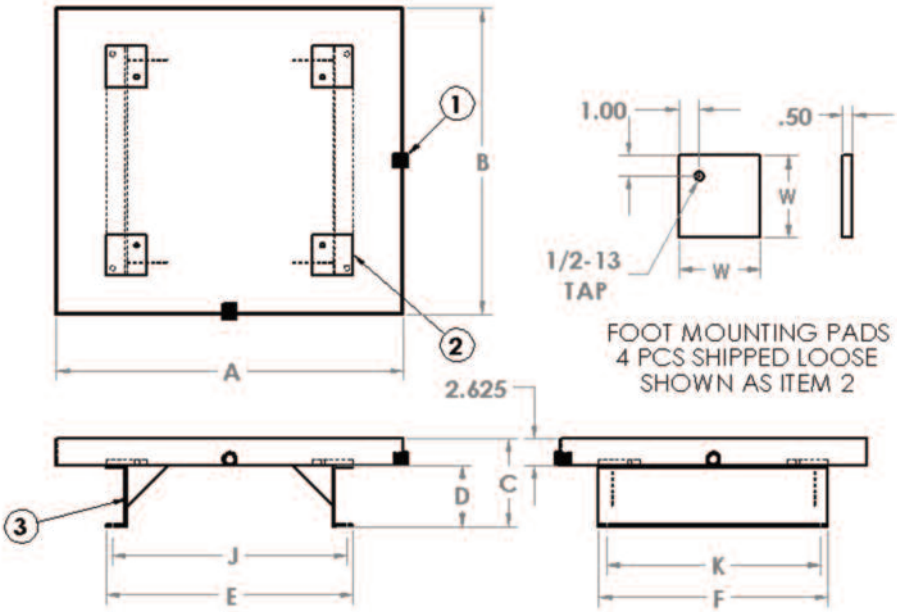

Includes:

1- (2) 3/4" NPT Drains
2 - (4) Foot Mounting Pads Included (loose)
3 - To eliminate Risers Change Part Number to RJDPP Series
Sizes 10 thru 100 Drip Pans are 11 gauge
Sizes 120 thru 200 Drip Pans are 7 gauge
Primer Coated Exterior
All Edges Deburred
Designed to fit Magnaloy Stacking Module (pg 121) and RJIC Reservoir (pg 113) (see image above)

Part Number	Drip Pan Size (Gallons)	Fits Reservoir	Drip Pan Dimensions (Inches)								Pad
			A	B	C	D	E	F	J	K	W
RJDPR010	10	RJIC010-	34	30	8.63	6	24.25	22.5	18.25	16.5	4
RJDPR015	15	RJIC015-	38	30	8.63	6	28.25	22.5	22.25	16.5	4
RJDPR020	20	RJIC020-	42	30	8.63	6	32.25	22.5	26.25	16.5	4
RJDPR030	30-50	RJIC030- thru 50-	48	36	8.63	6	38.25	28.5	32.25	22.5	4
RJDPR060	60	RJIC060-	60	39	8.63	6	50.25	31.5	44.25	25.5	4
RJDPR080	80-100	RJIC080- thru 100-	72	39	8.63	6	62.25	31.5	56.25	25.5	4
RJDPR120	120-150	RJIC120- thru 150-	72	42	8.63	6	64.25	36.5	56.25	28.5	5
RJDPR200	200	RJIC200-	84	48	8.63	6	76.25	42.5	68.25	34.5	5

NOTE : *RJDPR Series include 6" Risers, Substitute RJDPP for Series number (same dimensions) if no Risers are needed.*
NOTE: *Due to Magnaloy's policy of continuous improvement, specifications are subject to change without notice.*

magnaloy coupling company *501 Commerce Drive Alpena, MI 49707* ***989 356-2186***
A Division of Douville Johnston Corporation *Fax: 989 354-4190* *http://www.magnaloy.com*

Stacking Modules for RJIC Series Reservoirs

Fits Magnaloy RJIC Series Reservoirs and Drip Pans:

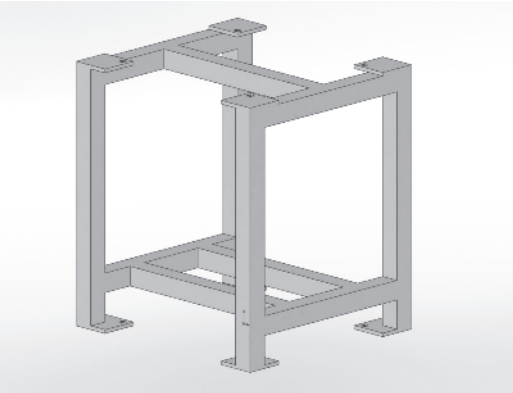

Size	Material	Foot Pads
10	2 x 2 x 11ga	4 x 4 x 3/8
15	2 x 2 x 11ga	4 x 4 x 3/8
20	2 x 2 x 11ga	4 x 4 x 3/8
30	2 x 2 x 11ga	4 x 4 x 3/8
40	2 x 2 x 11ga	4 x 4 x 3/8
50	2 x 2 x 11ga	4 x 4 x 3/8
60	2 x 2 x 11ga	4 x 4 x 3/8
80	2 x 2 x 11ga	4 x 4 x 3/8
100	2 x 2 x 11ga	4 x 4 x 3/8
120	3 x 3 x 7ga	5 x 5 x 3/8
150	3 x 3 x 7ga	5 x 5 x 3/8
200	3 x 3 x 7ga	5 x 5 x 3/8

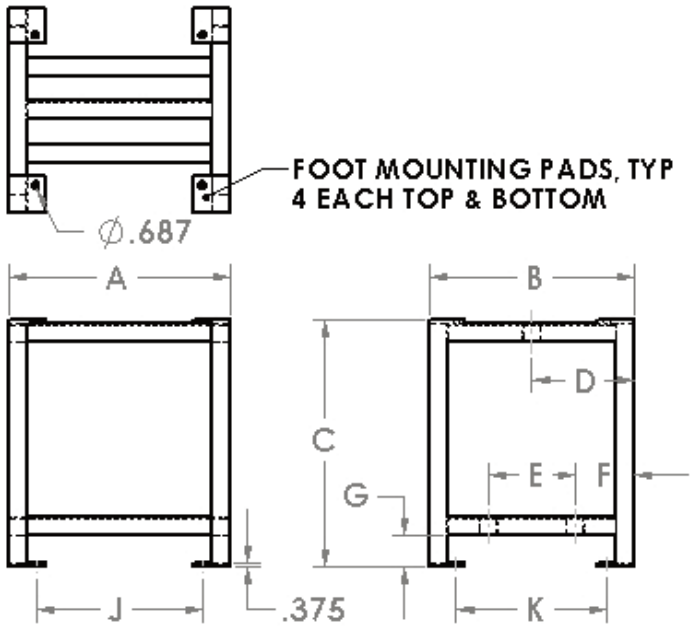

Includes:

(4) Foot Mounting Pads, Top and Bottom that aligns with RJIC Series Reservoir Mounting Holes and RJDPx Drip Pan Mounting Pads

Primer Coated Exterior

All Edges Deburred

Designed to fit Magnaloy RJDPx Drip Pan (pg 120) and RJIC Reservoir (pg 113) (see image, top of page 120)

4

Part Number	Fits Reservoir	Drip Pan Dimensions (Inches) Reservoir Dimensions (Inches)								
		A	B	C	D	E	F	G	J	K
RJSM010	RJIC010-	24.25	22.5	26.25	9.5	6*	6.5	3	18.25	16.5
RJSM015	RJIC015-	26.25	22.25	26.25	9.5	6*	6.5	3	22.25	16.5
RJSM020	RJIC020-	32.25	22.5	26.25	9.5	6*	6.5	3	26.25	16.5
RJSM030	RJIC030- thru 050-	38.25	28.5	26.25	12.5	6*	9.5	3	32.25	22.5
RJSM060	RIC0J60-	50.25	31.5	32.5	14	9*	9.5	3	44.25	25.5
RJSM080	RJIC080-	62.25	31.5	31.5	14	9*	9.5	3	56.25	25.5
RJSM100	RJIC100-	62.25	31.5	36.75	14	9*	9.5	3	56.25	25.5
RJSM120	RJIC120- thru 150-	64.25	36.5	36.75	15.5	9*	11	3	56.25	28.5
RJSM200	RJIC200-	76.25	42.5	36.75	18.5	9*	14	3	68.25	34.5

** This dimension can be changed at no additional charge to accommodate your pump/motor combination, consult factory.*

***NOTE:** Due to Magnaloy's policy of continuous improvement, specifications are subject to change without notice.*

6 Inch Steel End Cover:

End Cover Size	O.D.	Height	Material
REC06	5.38	.75	7 ga.

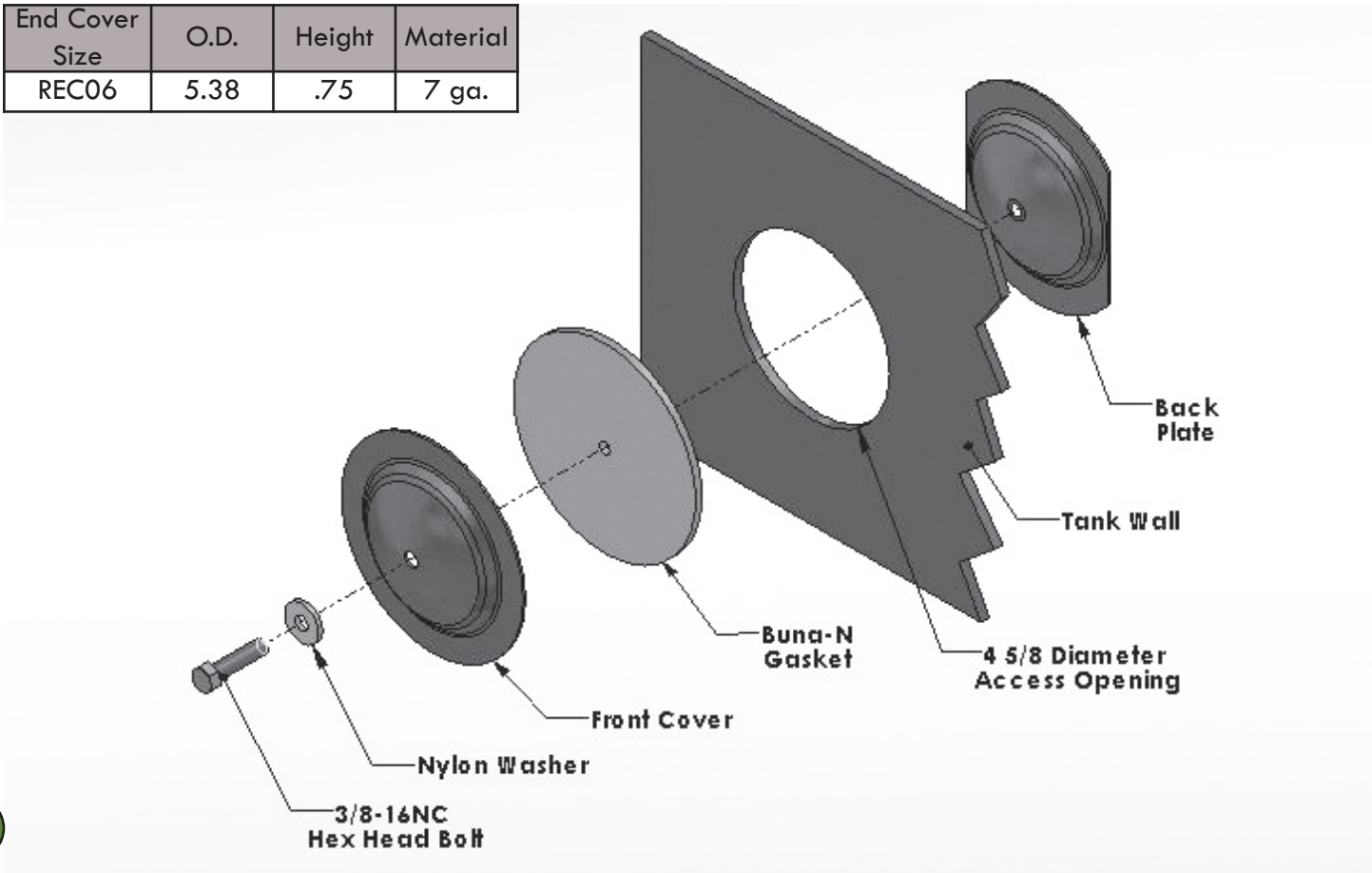

End Cover Assembly and Component Part Numbers:

End Cover Size	End Cover Assembly	End Cover Front Cover	End Cover Back Plate	End Cover Gasket	End Cover Nylon Washer	End Cover Bolt
6”	REC06K	REC06C	REC06B	REC06G	REC06W	REC06F

NOTE: *End Cover Assembly Includes - (1) Front Plate, (1) Back Plate, (1) 3/8-16 x 1.25” Bolt, (1) Nylon Crush Washer, (1) Buna-N Cover Gasket.*

NOTE: *4.625” Diameter Hole in the Reservoir is required for installation.*

magnaloy coupling company *501 Commerce Drive Alpena, MI 49707* ***989 356-2186***
A Division of Douville Johnston Corporation *Fax: 989 354-4190* *http://www.magnaloy.com*

12, 16, & 18 Inch Steel End Covers:

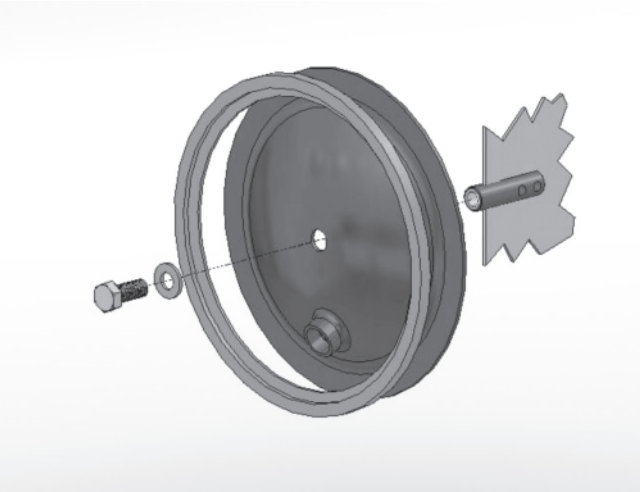

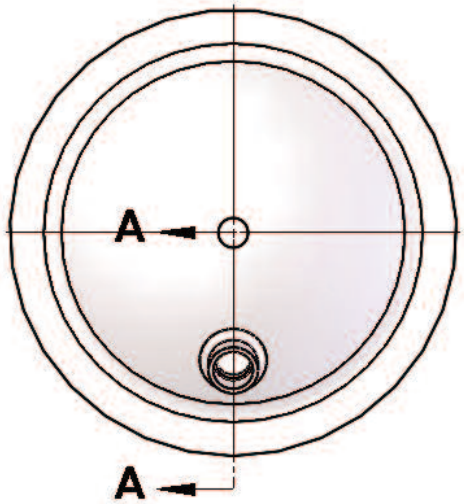

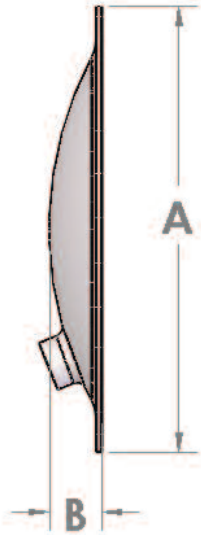

SECTION A-A
(with Gasket Installed)

End Cover Size	A	B	Material
12”	11.75	1.38	7 ga
14”	13.75	1.50	7 ga
16”	15.88	1.88	7 ga
18”	17.34	2.25	7 ga

Steel End Cover Kit and Component Part Numbers:

End Cover Size	End Cover Kit w/out Drain	End Cover Kit with 3/4” NPT Drain	End Cover Only w/out Drain	End Cover Only with 3/4” NPT Drain	End Cover Kit with #12 SAE Drain	End Cover Only with #12 SAE Drain
12”	REC12KX	REC12KN	REC12CX	REC12CN	REC12KS	REC12CS
14”	REC14KX	REC14KN	REC14CX	REC14CN	REC14KS	REC14CS
16”	REC16KX	REC16KN	REC16CX	REC16CN	REC16KS	REC16CS
18”	REC18KX	REC18KN	REC18CX	REC18CN	REC18KS	REC18CS

Stainless Steel End Cover Kit and Component Part Numbers:

End Cover Size	End Cover Kit w/out Drain	End Cover Kit with 3/4” NPT Drain	End Cover Only w/out Drain	End Cover Only with 3/4” NPT Drain	End Cover Kit w/#12 SAE Drain	End Cover Only w/#12 SAE Drain
12”	RECS12KX	RECS12KN	RECS12CX	RECS12CN	N/A	N/A
16”	RECS16KX	RECS16KN	RECS16CX	RECS16CN	N/A	N/A

NOTE: *End Cover Kit Includes: (1) End Cover, (1) Buna-N Gasket, (1) 5/8-11 Bolt, (1) Nylon Washer, (1) Baffle Lug.* ***(For Stainless Kit: Bolt is Stainless, but Baffle lug is not)***

NOTE: *End Cover Only Includes: (1) End Cover, (1) Buna-N Gasket*

magnaloy coupling company *501 Commerce Drive Alpena, MI 49707* ***989 356-2186***
A Division of Douville Johnston Corporation *Fax: 989 354-4190* *http://www.magnaloy.com*

SECTION 5

MAGNALOY RESERVOIR ACCESSORIES

NOTE: *Due to Magnaloy's policy of continuous improvement, specificaitons are subject to change without notice. Check with the factory or our Web Site at www.magnaloy.com for the latest information.*

magnaloy coupling company *501 Commerce Drive Alpena, MI 49707* ***989 356-2186***
A Division of Douville Johnston Corporation *Fax: 989 354-4190* *http://www.magnaloy.com*

High Capacity Spin-On Adapters

Converts standard breather installation to accept a high efficiency spin-on air breather

Features:

- **Material** - Anodized 6061 Aluminum
- **Flange Adapter** - Accepts 1 1/2-16 UN Threaded Spin-On Filters and uses the same mounting bolt circle as our Filler Breather Screens and comes complete with mounting hardware and gaskets.
- **Bayonet Adapters** - Accept either 1 1/2-16 UN, 1 1/8-16 UN or 1-12 UN threaded Spin-On Filters, fits all popular filler breather bayonet flanges and utilizes a Buna-N gasket to insure proper sealing.

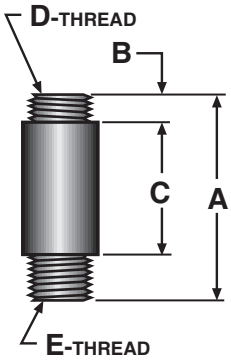

NPT Style Spin-On

Part Number	A	B	C	D	E
FBS-10012-012P	2.80	.435	1.572	1-12 UN	3/4 -NPT
FBS-10216-012P	2.80	.435	1.572	1 1/8-16 UN	3/4 -NPT
FBS-10816-104P	3.25	.435	1.945	1 1/2-16 UN	1 1/4 -NPT

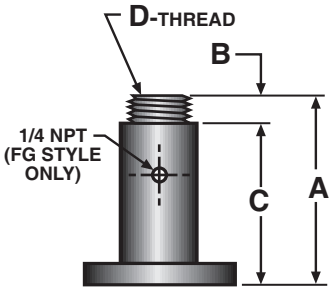

Flange Style Spin-On

Part Number	A	B	C	D
FBS-10816-F	3.051	.435	2.295	1 1/2-16 UN
FBS-10816-FG	4.756	.435	4.321	1 1/2-16 UN

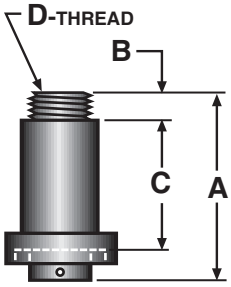

Bayonet Style Spin-On

Part Number	A	B	C	D
FBS-10012-B	2.135	.435	1.05	1-12 UN
FBS-10216-B	2.135	.435	1.05	1 1/8-16 UN
FBS-10816-B	2.135	.435	1.05	1 1/2-16 UN

Allows Filtered Air to Easily Flow in and out of the Hydraulic Reservoir while Preventing Airborne Contaminants from Entering the System.

Filler Breather Caps

Types & Features:

A Cap - 20 GPM, 10 Micron Filter, Stainless Steel
D Cap - 30 GPM, 10 Micron Filter, Stainless Steel
H Cap - 120 GPM, 10 Micron Filter, Stainless Steel
K Cap - Pressure Cap, 20 PSI-no relief, 10 Micron Filter, Chrome Plated
MB Cap - 10 GPM, 10 Micron Filter, Shatter Resistant Plastic (Temp Rating 225°F)

MB Type - Mini Breather

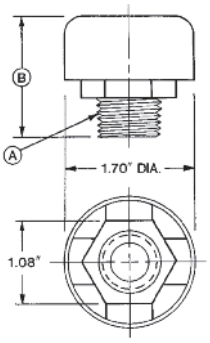

Type	Part Number	Mounting Type	Overall Height	Outside Diameter
A	FB-C-A	Bayonet	1.33	2.55
D	FB-C-D	Bayonet	1.30	2.55
H	FB-C-H	Bayonet	1.33	2.55
K	FB-C-K	Bayonet	.94	2.88
MB	FB-C-MB-P004	1/4 NPT	1.80	1.70
MB	FB-C-MB-P006	3/8 NPT	1.50	1.70
MB	FB-C-MB-P008	1/2 NPT	1.60	1.70
MB	FB-C-MB-P012	3/4 NPT	1.60	1.70

Mounting Flanges

Features:

Blue Zinc Plated
Available in Three Lengths

Part Number	Height	Description	Code
FB-F-008	.500	008 Mounting Flange	008
FB-F-108	1.50	108 Mounting Flange	108
FB-F-600	6.00	600 Mounting Flange	600

Filler Breather Screens

Materials & Features:

Part Number	Code	Mesh	Material	Length
FB-S-N *	N	200 Mesh	Brass	6.00
FB-S-P	P	30 Mesh	Nylon	4.00
FB-S-R *	R	30 Mesh	Brass	4.00
FB-S-V *	V	30 Mesh	Brass	9.25
FB-S-W	W	30 Mesh	Stainless	3.25
FB-S-X	X	30 Mesh	Stainless	6.25
FB-S-Y	Y	30 Mesh	Stainless	8.25
FB-S-Z	Z	30 Mesh	Stainless	10.25

* Check with factory for availability

magnaloy coupling company *501 Commerce Drive Alpena, MI 49707* ***989 356-2186***
A Division of Douville Johnston Corporation *Fax: 989 354-4190* *http://www.magnaloy.com*

Filler Breather Options:

PL - Pad Lock

L - Locking Cap

SM - Side Mounting Kit

D - Dipstick

Part Number	Code	Description
FB-O-PL	PL	Pad Lock - not included with locking cap option
FB-O-L	L	Cap Lock Kit
FB-O-SM	SM	Side Mounting Kit
FB-O-D	D	Dipstick - specify length, measured from bottom of mounting flange to end of dipstick

How to Order:

Standard Assemblies:

Code	Description
FB-A008W	Stainless Steel, Weatherproof, 10 micron, 20 GPM Cap; 1/2" Mounting Flange; 30 mesh, 3 1/4", Stainless Steel Screen
FB-A008P	Stainless Steel, Weatherproof, 10 micron, 20 GPM Cap; 1/2" Mounting Flange; 30 mesh, 4", Nylon Screen
FB-K008W	Pressurized, Chrome Plated, 20 PSI Cap; 1/2" Mounting Flange; 30 mesh, 3 1/4", stainless steel Screen

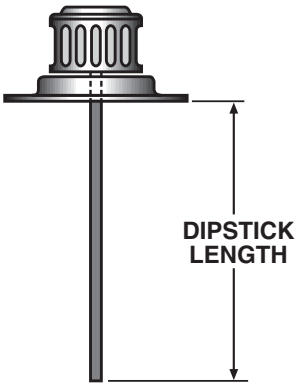

Custom Assemblies:

Select the components that best meet your particular hydraulic system requirements and custom build the part number as follows:

FB - A 008 Y - D8

Code	Option
Blank	No Options
PL	Pad Lock
L	Locking Cap
SM	Side Mount
D	Dipstick

Code	Cap Type
A	A Cap
D	D Cap
H	H Cap
K	K Cap

Code	Mounting Flange
008	1/2" Height
108	1 1/2" Height
600	6" Height

Code	Screen Material
N	6" Brass
P	4" Nylon
R	4" Brass
S	14 1/2" Zinc Plated
V	9 1/4" Brass
W	3 1/4" Stainless
X	6 1/4" Stainless
Y	8 1/2" Stainless
Z	10 1/4" Stainless

magnaloy coupling company *501 Commerce Drive Alpena, MI 49707* ***989 356-2186***
A Division of Douville Johnston Corporation *Fax: 989 354-4190* *http://www.magnaloy.com*

Premium Line Suction and Return Line Flanges - heavy duty, positive sealing Suction and Return Line Flanges

Features:

- Positive Urethane Seal - protects against particulate and liquid contamination.
- Mounting Hardware - required screws, bolts, washers and gaskets are included.
- Available in Many Popular Tube and Pipe Sizes - 1/2" thru 2" Pipe and Tube.
- Large Suction Line Flange Plate - allows easy access for suction line strainer installation and maintenance.
- Rigid/Heavy Duty Zinc Plated Die Cast Flange - will not deflect or distort, provides sealing forces to urethane seal.

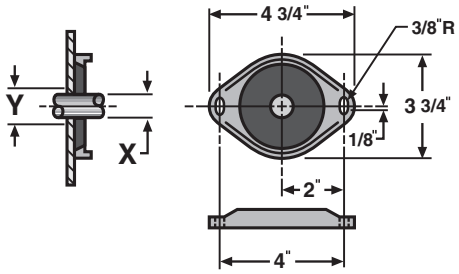

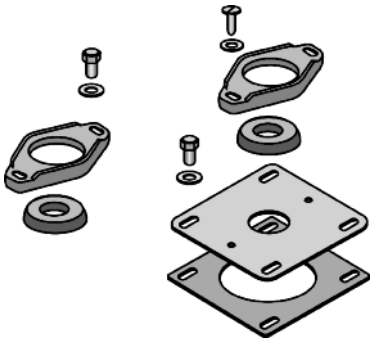

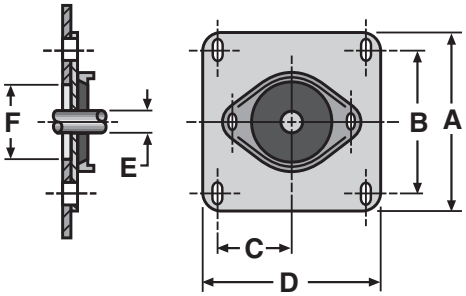

Pipe Sizes: from 1/2" to 2"

Return Line Flange:

Part Number	Nominal Pipe Size	Pipe OD X	Clearance Hole Dia. Y
RLF-008P	1/2"	0.84	1.00
RLF-012P	3/4"	1.05	1.19
RLF-100P	1"	1.32	1.44
RLF-104P	1 1/4"	1.66	1.81
RLF-108P	1 1/2"	1.90	2.06
RLF-200P	2"	2.38	2.50

Suction Line Flange:

Part Number	Nominal Pipe Size	A	B	C	D	Pipe OD E	Clearance Hole Dia. F
SLF-008P	1/2"	5.50	4.25	2.12	5.25	0.84	4.25
SLF-012P	3/4"	5.50	4.25	2.12	5.25	1.05	4.25
SLF-100P	1"	5.50	4.25	2.12	5.25	1.32	4.25
SLF-104P	1 1/4"	5.50	4.25	2.12	5.25	1.66	4.25
SLF-108P	1 1/2"	7.50	6.25	3.12	7.25	1.90	6.25
SLF-200P	2"	7.50	6.25	3.12	7.25	2.38	6.25

Tube Sizes: from 1/2" to 2"

Return Line Flange:

Part Number	Nominal Tube Size	Tube OD X	Clearance Hole Dia. Y
RLF-008T	1/2"	0.50	.75
RLF-012T	3/4"	.75	1.00
RLF-100T	1"	1.00	1.25
RLF-104T	1 1/4"	1.25	1.50
RLF-108T	1 1/2"	1.50	1.75
RLF-200T	2"	2.0	2.25

Suction Line Flange:

Part Number	Nominal Tube Size	A	B	C	D	Tube OD E	Clearance Hole Dia. F
SLF-008T	1/2"	5.50	4.25	2.12	5.25	0.50	4.25
SLF-012T	3/4"	5.50	4.25	2.12	5.25	.75	4.25
SLF-100T	1"	5.50	4.25	2.12	5.25	1.00	4.25
SLF-104T	1 1/4"	5.50	4.25	2.12	5.25	1.25	4.25
SLF-108T	1 1/2"	7.50	6.25	3.12	7.25	1.50	6.25
SLF-200T	2"	7.50	6.25	3.12	7.25	2.00	6.25

magnaloy coupling company 501 Commerce Drive Alpena, MI 49707 989 356-2186

A Division of Douville Johnston Corporation Fax: 989 354-4190 http://www.magnaloy.com

Economy Line Suction and Return Line Flanges - an alternative to the Magnaloy Premium Line of Suction and Return Line Flanges.

Features:

- Tight Fitting Buna-N Washer to provide positive sealing against contaminants.
- Required Mounting Hardware included.
- Available in Many Popular Tube and Pipe Sizes.
- 2 Large Flange Plate Sizes offered in Suction Line Flanges provide easy access to Suction Line Strainer.

Economy Return Line Flanges:

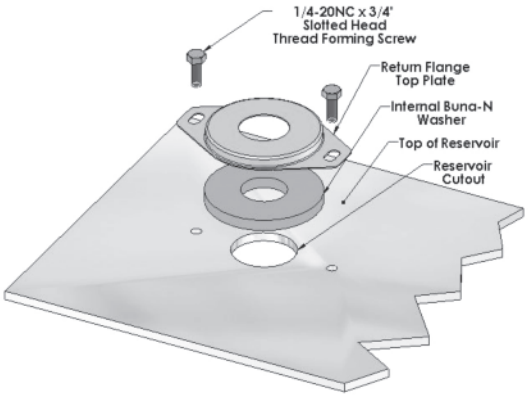

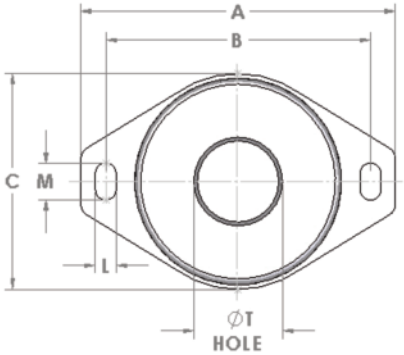

Mounting Hole Dimensions:

L	M
5/16	9/16

Pipe Sizes:

Part Number	Nominal Pipe Size	A	B	C	T[2]	Reservoir Cutout
RLFE-000P[1]	N/A	4 3/4	4	3 1/8	1 3/16	N/A
RLFE-008P	1/2"	4 3/4	4	3 1/8	1 3/16	1 3/16
RLFE-012P	3/4"	4 3/4	4	3 1/8	1 3/4	1 3/4
RLFE-100P	1"	4 3/4	4	3 1/8	1 3/4	1 3/4
RLFE-104P	1 1/4"	4 3/4	4	3 1/8	2 1/2	2 1/2
RLFE-108P	1 1/2"	4 3/4	4	3 1/8	2 1/2	2 1/2
RLFE-200P	2"	4 3/4	4	3 1/8	2 1/2	2 1/2

Tube Sizes:

Part Number	Nominal Tube Size	A	B	C	T[2]	Reservoir Cutout
RLFE-006T	3/8"	4 3/4	4	3 1/8	1 3/16	1 3/16
RLFE-008T	1/2"	4 3/4	4	3 1/8	1 3/16	1 3/16
RLFE-012T	3/4"	4 3/4	4	3 1/8	1 3/16	1 3/16
RLFE-100T	1"	4 3/4	4	3 1/8	1 3/4	1 3/4
RLFE-104T	1 1/4"	4 3/4	4	3 1/8	2 1/2	2 1/2
RLFE-108T	1 1/2"	4 3/4	4	3 1/8	2 1/2	2 1/2
RLFE-200T	2"	4 3/4	4	3 1/8	2 1/2	2 1/2

1 Use this Blank Flange for covering unused openings or for custom Pipe or Tube Sizes.
2 Opening in metal flange - required clearance to Pipe or Tube OD.

magnaloy coupling company *501 Commerce Drive Alpena, MI 49707* ***989 356-2186***
A Division of Douville Johnston Corporation *Fax: 989 354-4190* *http://www.magnaloy.com*

Economy Suction Line Flanges:

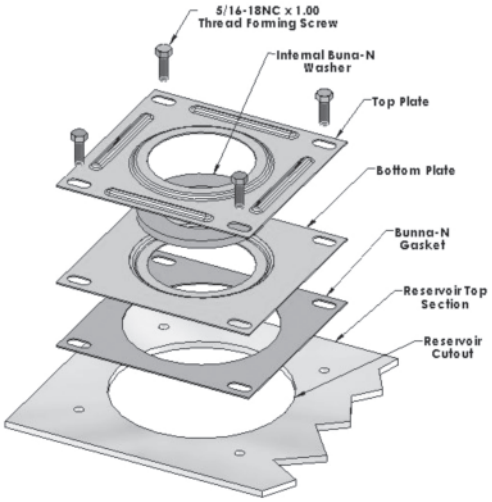

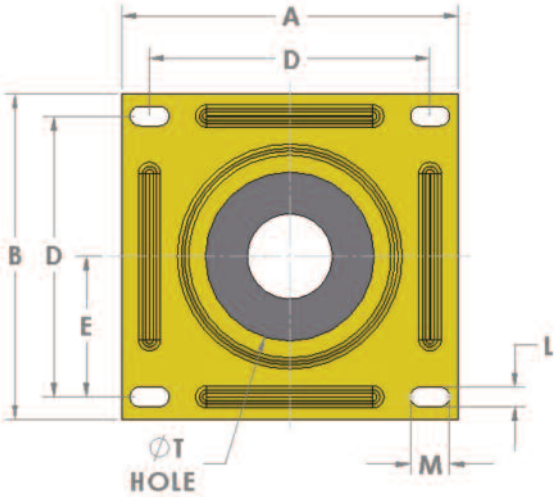

Mounting Hole Dimensions:

L	M
7/16	7/8

Pipe Sizes:

Part Number	Nominal Pipe Size	A	B	D	E	T[2]	Reservoir Cutout
SLFE-500-000P[1]	N/A	5 1/2	5 1/4	4 1/4	2 1/8	1 3/16	4 1/2
SLFE-500-008P	1/2”	5 1/2	5 1/4	4 1/4	2 1/8	1 3/16	4 1/2
SLFE-500-012P	3/4”	5 1/2	5 1/4	4 1/4	2 1/8	1 3/16	4 1/2
SLFE-500-100P	1”	5 1/2	5 1/4	4 1/4	2 1/8	1 3/4	4 1/2
SLFE-500-104P	1 1/4”	5 1/2	5 1/4	4 1/4	2 1/8	1 3/4	4 1/2
SLFE-500-108P	1 1/2”	5 1/2	5 1/4	4 1/4	2 1/8	1 3/4	4 1/2
SLFE-500-200P	2”	5 1/2	5 1/4	4 1/4	2 1/8	2 1/2	4 1/2
SLFE-700-108P	1 1/2”	7 1/2	7 1/4	6 1/4	3 1/8	3 1/8	6 1/2
SLFE-700-200P	2”	7 1/2	7 1/4	6 1/4	3 1/8	3 1/8	6 1/2
SLFE-700-208P	2 1/2”	7 1/2	7 1/4	6 1/4	3 1/8	3 3/4	6 1/2
SLFE-700-300P	3”	7 1/2	7 1/4	6 1/4	3 1/8	3 3/4	6 1/2

Tube Sizes:

Part Number	Nominal Tube Size	A	B	D	E	T[2]	Reservoir Cutout
SLFE-500-006T	3/8”	5 1/2	5 1/4	4 1/4	2 1/8	1 3/16	4 1/2
SLFE-500-008T	1/2”	5 1/2	5 1/4	4 1/4	2 1/8	1 3/16	4 1/2
SLFE-500-012T	3/4”	5 1/2	5 1/4	4 1/4	2 1/8	1 3/16	4 1/2
SLFE-500-100T	1”	5 1/2	5 1/4	4 1/4	2 1/8	1 3/4	4 1/2
SLFE-500-104T	1 1/4”	5 1/2	5 1/4	4 1/4	2 1/8	1 3/4	4 1/2
SLFE-500-108T	1 1/2”	5 1/2	5 1/4	4 1/4	2 1/8	1 3/4	4 1/2

1 Use this Blank Flange for covering unused openings or for custom Pipe or Tube Sizes.
2 Opening in metal flange - required clearance to Pipe or Tube OD.

magnaloy coupling company *501 Commerce Drive Alpena, MI 49707* ***989 356-2186***
A Division of Douville Johnston Corporation *Fax: 989 354-4190* *http://www.magnaloy.com*

Channel Mounted Cushion Clamps

Magnaloy offers a complete line of channel-mounted cushion clamps for a great looking, vibration free tube/pipe mounting solution.

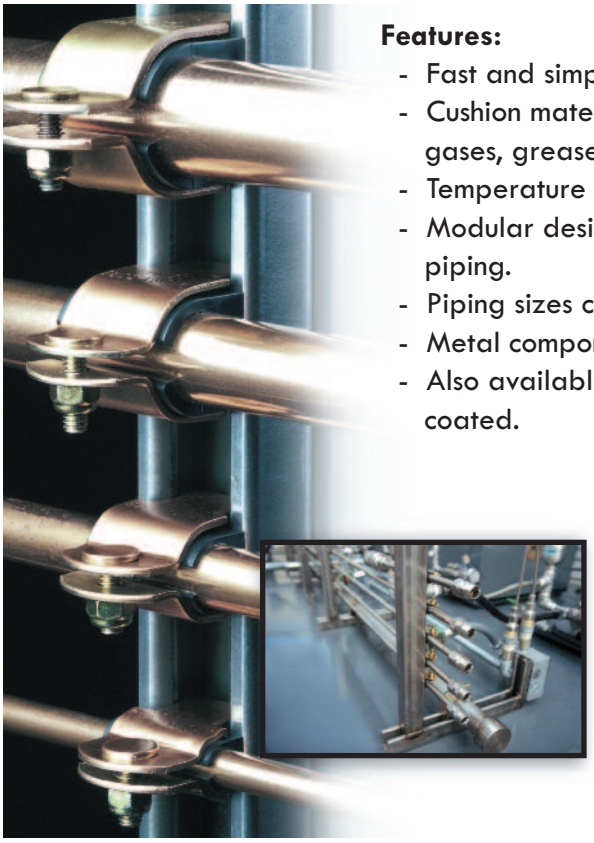

Features:

- Fast and simple installation - one person/one tool required.
- Cushion material is a thermoplastic elastomer resistant to most fuels, oils, gases, greases, solvents, mineral acids and other materials.
- Temperature range -65°F (-54°C) to +275°F (+135°C).
- Modular design allows adding or changing piping without disturbing adjacent piping.
- Piping sizes can be mixed to suit installation requirments.
- Metal components are Tri-Valent (non-hex) plated.
- Also available in 304 and 316 stainless steel, aluminum, or galvanized powder coated.

Materials:

Standard Cushion Clamp Materials:

- Cushion material is TPE plastic
- Clamps are 1008-1010 carbon steel
- Studs are welded carbon steel
- Locknut is nylon insert type
- All metal components have Tri-Valent plating

Optional Cushion Clamp Materials:

Code	Description
-G64	*Galvanized Powder Coated clamps*
	316 Stainless Steel Hex Head Bolt (loose packed)
	304 Stainless Steel Locknut
-444	*304 Stainless Steel Clamps*
	304 Stainless Steel Stud (welded)
	304 Stainless Steel Locknut
-464	*304 Stainless Steel Clamps*
	316 Stainless Steel Hex Head Bolt (loose packed)
	304 Stainless Steel Locknut
-644	*316 Stainless Steel Clamps*
	304 Stainless Steel Stud (welded)
	304 Stainless Steel Locknut
-666	*316 Stainless Steel Clamps*
	316 Stainless Steel Hex Head Bolt (loose packed)
	316 Stainless Steel Locknut
-A64	*Aluminum 5052 Clamps*
	316 Stainless Steel Hex Head Bolt (loose packed)
	304 Stainless Steel Locknut

Clamp Assembly Part Numbers, Availability and Dimensional Data

Clamp Assembly Part Number Breakdown:

MCC - 008P -xxx

- *Optional Material CODE* (*see page131, leave blank for standard*)
- *Piping Size Code*
- *Magnaloy Cushion Clamp*

See Reference Section, page 183, for Manufacturers Cross References

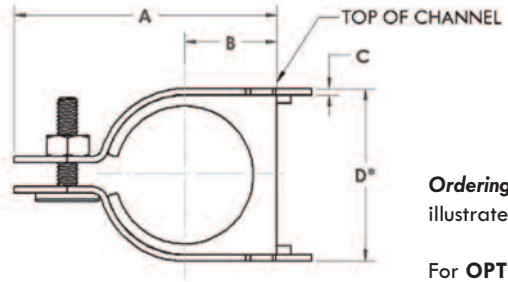

PIPE Sizes:

PIPE Nominal Size	1/4	3/8	1/2	3/4	1	1 1/4
Pipe Outside Diameter	.54	.675	.84	1.05	1.315	1.665
Pipe Size CODE	**008P**	**012P**	**016P**	**024P**	**100P**	**108P**
Quantity per Box [1]	25	25	25	20	20	20
Carbon Steel 5S, 10S, 40, 80	o	o	o	o	o	o
Stainless 5S, 10S, 40, 80	o	o	o	o	o	o
Red & Yellow Brass & Copper	o	o	o	o	o	o
Aluminum 5S, 10S, 40, 80	o	o	o	o	o	o
PVC 48, 80, 120	o	o	o	o	o	o
CPVC 40, 80	o	o	o	o	o	o
PE 40, 80	o	o	o	o	o	o
PP 40, 80	o	o	o	o	o	o
PVDF 80		o	o	o	o	o
PB 40		o	o	o	o	o
ABS 40, 80		o	o	o	o	o
Fibergalss			o	o	o	o
A	1.41	1.59	1.91	2.16	2.75	3.03
B	.63	.45	.59	.72	.91	1.03
C	.075	.075	.075	.105	.119	.119
D*	.91	1.07	1.45	1.79	2.22	2.47

*** Minimum Required Installation Dimension**

Ordering Information: To order the standard Cushion Clamp, use **MCC-** followed by the Piping Size CODEs as illustrated in the tables on pages 132 & 133 depending Pipe or Tube sizes.

For **OPTIONAL MATERIALS** consult page 131 and select the material combination best suited for your requirements. Use the part number as above, followed by the material **CODE** from page 131.

TUBE Sizes:

TUBE Outside Diameter	.250	.312	.375	.470	.500	.625	.750	.875	1.000	1.125	1.190	1.250
Tube Size CODE	**008T**	**010T**	**012T**	**015T**	**016T**	**020T**	**024T**	**028T**	**100T**	**104T**	**106T**	**108T**
Quantity per Box [1]	25	25	25	25	25	25	25	25	25	20	20	20
ACR Tube			o	o	o	o	o	o		o	o	o
Refrigeration Service	o	o	o	o	o	o	o	o		o	o	o
Type "K" Copper			o	o	o	o	o	o		o	o	o
Type "L" Copper			o	o	o	o	o	o		o	o	o
Type "M" Copper			o	o	o	o	o	o		o	o	o
Steel	o	o	o	o	o	o	o	o	o	o	o	o
Stainless Steel	o	o	o	o	o	o	o	o	o	o	o	o
Aluminum			o		o	o	o	o	o	o	o	o
PB			o		o	o		o		o	o	o
PVC			o			o		o		o	o	o
CPVC			o		o	o		o		o	o	o
PE			o			o		o		o	o	o
A	1.11	1.24	1.24	1.36	1.36	1.50	1.78	1.91	2.03	2.16	2.30	2.30
B	.22	.28	.28	.34	.34	.41	.53	.58	.66	.72	.72	.78
C	.075	.075	.075	.075	.075	.075	.075	.075	.105	.105	.105	.105
D*	.62	.75	.75	.87	.87	1.00	1.33	1.45	1.66	1.79	1.92	1.92

Note 1: Clamps are sold in single quantities, box quantity indicated for ordering convenience.

For Hoses - measure hose outside diameter and select the nearest O.D. size above.

Note: Anchor Channel is ordered separately. See page 134 for part numbers.

magnaloy coupling company *501 Commerce Drive Alpena, MI 49707* ***989 356-2186***

A Division of Douville Johnston Corporation *Fax: 989 354-4190* *http://www.magnaloy.com*

***PIPE Sizes** (continued):*

1 1/2	2	2 1/2	3	3 1/2	4	5	6
1.90	2.375	2.875	3.5	4.0	4.5	5.563	6.625
116P	**200P**	**216P**	**300P**	**316P**	**400P**	**500P**	**600P**
12	Each	Each	Each	Each	Each	Each	Each
o	o	o	o	o	o	o	o
o	o	o	o	o	o	o	o
o	o	o	o	o	o		
o	o	o	o	o	o	o	o
o	o	o	o	o	o	o	o
o	o	o	o	o	o	o	o
o	o	o	o	o	o	o	o
o	o	o	o	o	o	o	o
o	o	o	o	o	o	o	o
o	o	o	o	o	o	o	o
o	o	o	o	o	o	o	o
o	o	o	o	o	o	o	o
3.28	3.78	4.27	4.91	5.53	6.03	7.03	8.03
1.16	1.41	1.66	1.97	2.28	2.53	3.03	3.53
.119	.119	.119	.119	.119	.119	.135	.135
2.47	3.22	3.72	4.36	4.97	5.47	6.47	7.47

Ordering Examples: To order the standard 2 1/2" Tube Cushion Clamp - order part number MCC-216T
To order the standard 1 1/4" Pipe Cushion Clamp - order part number MCC-108P
To order the 2 1/2" Tube Cushion Clamp with 304 Stainless Steel Clamps, stud, and locknut - order MCC-216T-444
To order the 1 1/4" Pipe Cushion Clamp with galvanized powder coated clamps, 316 stainless steel stud, and 304 stainless steel locknut - oder part number MCC-108P-G64

Note: Anchor Channel is ordered separately. See page 134 for more information and part numbers.

***TUBE Sizes** (continued):*

1.375	1.500	1.625	1.750	1.875	2.000	2.125	2.250	2.375	2.500	2.625	2.875	3.000	3.125	3.625	4.125
112T	**116T**	**120T**	**124T**	**128T**	**200T**	**204T**	**208T**	**212T**	**216T**	**220T**	**224T**	**300T**	**304T**	**320T**	**404T**
12	12	12	12	12	12	Each	Each	Each	Each	Each	Each	Each	Each	Each	Each
o		o				o		o		o			o	o	o
o		o													
o		o				o				o			o	o	o
o		o				o				o			o	o	o
o		o				o				o			o	o	o
o	o	o	o	o	o	o	o	o	o	o	o	o	o	o	o
o	o	o	o	o	o	o	o	o	o	o	o	o	o	o	o
	o				o	o			o	o			o	o	o
o		o				o				o			o	o	o
o		o			o					o			o	o	o
o					o					o			o	o	o
o		o				o				o			o	o	o
2.75	2.75	3.03	3.03	3.28	3.28	3.53	3.78	3.78	4.03	4.03	4.27	4.52	4.52	5.03	5.66
.91	.91	1.03	1.03	1.16	1.16	1.28	1.41	1.41	1.53	1.53	1.66	1.78	1.78	2.03	2.34
.119	.119	.119	.119	.119	.119	.119	.119	.119	.119	.119	.119	.119	.119	.119	.119
2.22	2.22	2.47	2.47	2.47	2.72	2.97	3.22	3.22	3.47	3.47	3.72	3.97	3.97	4.47	5.09

Clamp Anchor Channel Part Number Breakdown:

MAC - S 12 100 - 036 / S

- *Material (steel / stainles steel / aluminum)*
- *Length*
- *Height (H)*
- *Channel Gauge (G)*
- *Series (single / double)*
- *Magnaloy Anchor Channel*

Channel Notes:
- All Channel widths 1 5/8"
- Steel Channel shipped with plain finish (hot rolled p.o.)
- Special cut tolerances +/- 1/8"

SINGLE CHANNEL

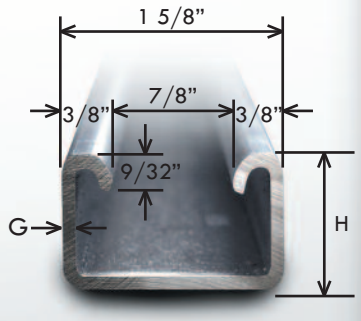

Part Number	Height (H)	Gauge (G)	Material	Length
MAC-S12100-036/S	1"	12	Steel	36"
MAC-S12100-048/S	1"	12	Steel	48"
MAC-S12100-120/S	1"	12	Steel	120"
MAC-S12028-036/S	7/8"	12	Steel	36"
MAC-S12028-048/S	7/8"	12	Steel	48"
MAC-S12028-120/S	7/8"	12	Steel	120"
MAC-S14026-048/S	13/16"	14	Steel	48"
MAC-S14026-120/S	13/16"	14	Steel	120"
MAC-S14026-048/SS4	13/16"	14	304 SS	48"
MAC-S14026-120/SS4	13/16"	14	304 SS	120"
MAC-S14026-048/SS6	13/16"	14	316 SS	48"
MAC-S14026-120/SS6	13/16"	14	316 SS	120"
MAC-S12028-048/A	7/8"	12	Aluminum	48"
MAC-S12028-144/A	7/8"	12	Aluminum	144"

DOUBLE CHANNEL

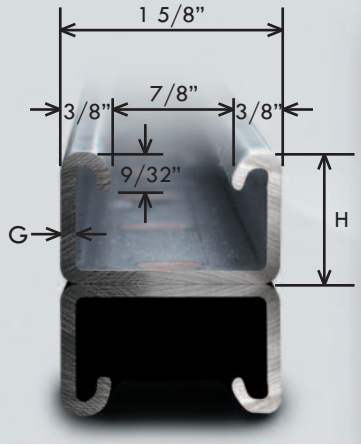

Part Number	Height (H)	Gauge (G)	Material	Length
MAC-D12200-048/S	2"	12	Steel	48"
MAC-D12200-120/S	2"	12	Steel	120"
MAC-D12124-048/S	1 3/4"	12	Steel	48"
MAC-D12124-120/S	1 3/4"	12	Steel	120"
MAC-D14120-048/S	1 5/8"	14	Steel	48"
MAC-D14120-120/S	1 5/8"	14	Steel	120"
MAC-D14120-048/SS4	1 5/8"	14	304 SS	48"
MAC-D14120-120/SS4	1 5/8"	14	304 SS	120"
MAC-D14120-048/SS6	1 5/8"	14	316 SS	48"
MAC-D14120-120/SS6	1 5/8"	14	316 SS	120"
MAC-D12120-048/A	1 5/8"	12	Aluminum	48"
MAC-D12120-144/A	1 5/8"	12	Aluminum	144"

magnaloy coupling company *501 Commerce Drive Alpena, MI 49707* ***989 356-2186***

A Division of Douville Johnston Corporation *Fax: 989 354-4190* *http://www.magnaloy.com*

Modular-Stackable Cushion Clamps

Magnaloy offers modular cushion clamps in a stackable design - allowing a wide variety of configurations.

Mounting Features:

- Assemblies can be mounted using weld plates, by bolting directly into place, using channel, or suspended using threaded rod.
- Formed weld bases have integral weld nuts secured from the underside so weld failure will not cause clamp failure.
- Heavy Duty weld plates, including weld nuts, are available for heavy duty applications.

Stacking and Tiering Features:

- Center distance of mounting holes (bolt holes)(A) and height of assembly (G+I+J) are equal.
- Like sized assemblies (same series) have equal width for clean appearance when stacked.
- Double retainer plates are used for heavier-duty applications (also, required when stacking or tiering).

Clamp Features:

- Reduced noise, shock and vibration caused by surges in fluid conductors.
- Eliminates metal to metal contact between fluid conductors and clamps preventing galvanic reaction.
- Cushion material is thermoplastic elastomer resistant to most fuels, oils, gases, greases, solvents, mineral acids and other materials.
- Temperature range -20°F (-29°C) to 212°F (100°C).
- Fast and simple installation.
- Large selection of components for assemblies to satisfy your applicaiton requirements.
- Assemblies available in single or double line installations.

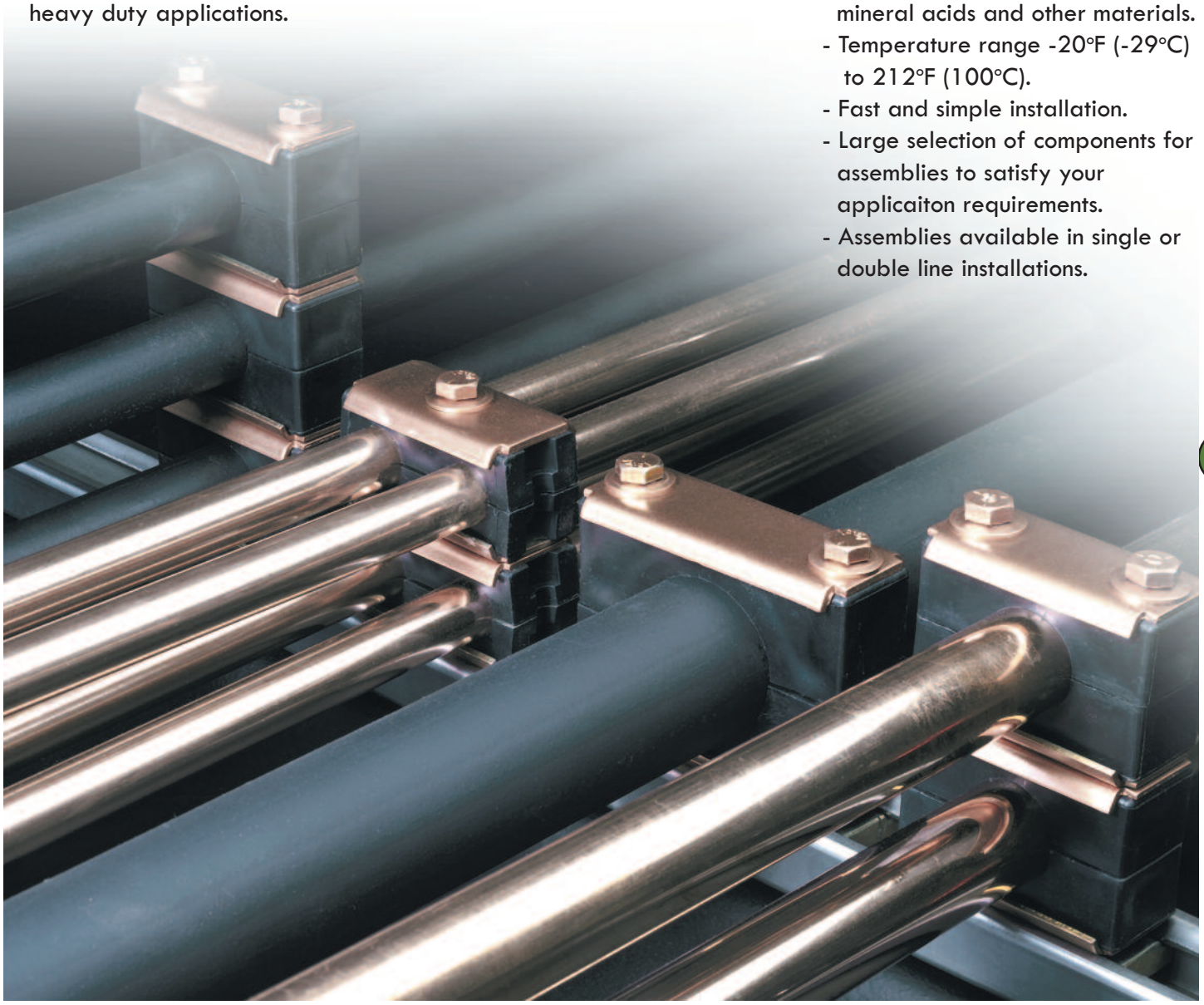

Modular Cushion Clamp Part Number Breakdown:

MMC - 511 100T - 0111

- *Tier Arrangement (see pages139 & 140)*
- *Cushion I.D. Size Code (see page 138)*
- *Cushion Series and Type (see page137)*
- *Magnaloy Modular Cushion Clamp*

Formulation of the Part Number:

1. See page 137 to determine the Cushion Series and Type. See below for dimension data.
2. See page 138 for Cushion I.D. Size Code depending on the Tube or Pipe size(s) being used.
3. See pages 139 & 140 for Tier Arrangement. Shown on page 140 are the most popular single and double tiering arrangements for the Modular Cushion Clamp assemblies.

Note: See Reference Section, page 184, for Manufacturers Cross References

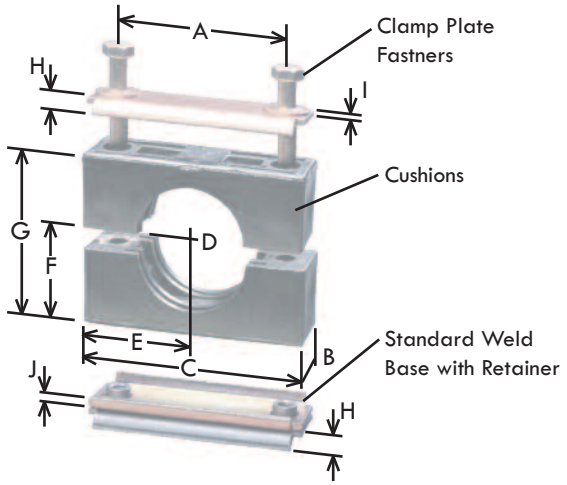

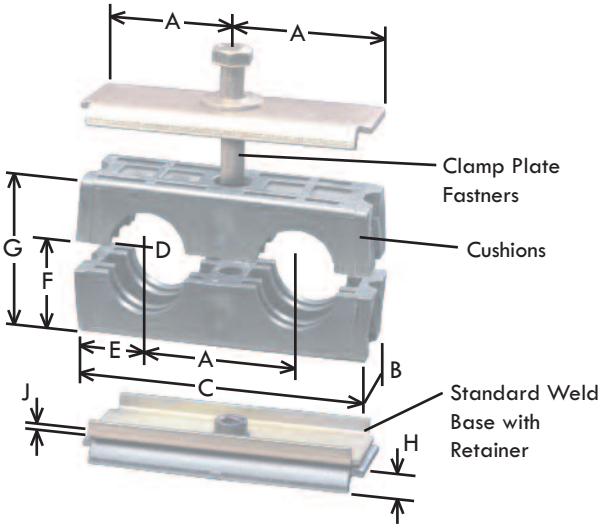

5

Clamp Series & Type	A	B	C	D	E	F	G	H	I	J
511		1.16	1.45	Cushion I.D. (see page 138)			.85			
521	1	1.16	1.90		.95	.425	.85	.30	.075	.075
522	1	1.16	1.94		.45	.425	.85	.30	.075	.075
524	1	1.16	3.88		.45	.425	.85	.30	.075	.075
531	1 1/2	1.16	2.40		1.20	.675	1.35	.30	.105	.075
532	1 1/2	1.16	2.94		.72	.675	1.35	.30	.105	.075
541	2	1.16	2.90		1.45	.925	1.85	.30	.105	.075
542	2	1.16	3.94		1.87	.925	1.85	.30	.105	.075
561	2	1.16	3.90		1.95	1.395	2.79	.30	.105	.105

magnaloy coupling company *501 Commerce Drive Alpena, MI 49707* ***989 356-2186***
A Division of Douville Johnston Corporation *Fax: 989 354-4190* *http://www.magnaloy.com*

Cushion Series and Type:

See page 136 for dimensions

511

521

522

524

531

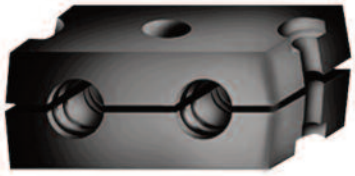

532

541

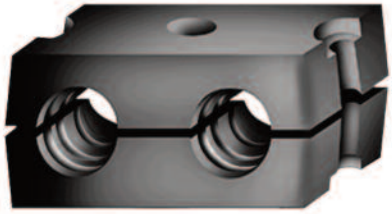

542

561

Cushion I.D. Size Code, Availability and Tube/Pipe Dimensions:

Modular Cushion Series									Cushion I.D. Size CODE	"D" (see page 136)				
511	521	522	524	531	532	541	542	561		Tube O.D.	Nominal Pipe I.D.	Nominal ACR Tube I.D.	Bulkhead Hex	Bulkhead Tube
o	o	o	o						008T	.250				
o	o	o	o						010T	.312				
o	o	o	o	o	o				012T	.375		.250	.500	1/4
o	o	o	o	o	o				016T	.500		.375	.531	5/16
				o	o				008P		1/4			
				o	o		o		020T	.625		.500	.687	3/8
				o	o		o		012P		3/8			
				o	o		o		024T	.750		.625	.812	1/2
				o	o		o		016P		1/2			
				o	o		o		028T	.875		.750	.937	5/8
						o	o		100T	1.000			1.125	3/4
						o	o		024P		3/4			
						o	o		100A			1.000	1.250	7/8
						o	o		108T	1.250			1.370	1
						o	o		100P		1			
						o	o	o	108A			1.250		
								o	116T	1.500			1.680	1 1/4
								o	116A			1.500		
								o	108P		1 1/4			
								o	124T	1.750				
								o	116P		1 1/2		2.000	1 1/2
								o	200T	2.000				
								o	200A			2.000		
								o	208T	2.250				
								o	200P		2			

5

Simplified Ordering: There are many combinations of single and multiple clamp arrangements available and to simplify the selection process, the most common Single Tier and Double Tier arrangements are shown on page 141. Also illustrated, on page 139, is a breakdown of the TIER CODE used for ordering and details of the most popular items in this breakdown. There are other Base Types, Retainer Types and Fastener Types available in addition to those illustrated, consult the factory for more information.

For Multi-Tier ordering, the top cushion part number will specify the 'Base Type', 'Retainer Type', 'Fastener Type' and 'Fastner Length'. The bottom cushion part number will specify any additional retainers required. In the case of an assembly using the 'Stack Stud and Nut' fastner type, the top cushion and bottom cushion are basically stand alone assemblies. The top cushion part number 'Base Type' is "4" (none) as this is the stacking verison, and the 'Fastener Length' is "1" (single) since it is mated with the 'Stack Nut'. The bottom cushion part number 'Retainer Type' is "7" (double lock plate) which is used with the 'Stack Nut' and the 'Fastener Length' is "1" (single) as it only goes through a single cushion.

In selecting the 'Base Type', the Weld Base includes a Clamp Plate and Weld Plate. The 'Spring Nut Mount' requires a Clamp Plate and Stack Plate and when using the Heavy Duty Weld Plate a retainer plate is not required above the Base Plate

TIER CODE Part Number Breakdown:

- 1 1 1 1

Fastner Length
- **0** - None
- **1** - Single Tier
- **2** - Double Tier
- **3** - Triple Tier

Fastner Type *(see detail at right)*
- **0** - None
- **1** - Hex Head Screw & Washer
- **7** - Stack Stud and Nut

Retainer Type *(see detail at right)*
- **0** - None
- **1** - Clamp Plate
- **2** - Clamp Plate & Stack Plate
- **6** - Double Clamp Plate
- **7** - Double Lock Plate

Base Type *(see detail below)*
- **0** - None
- **1** - Weld Base
- **3** - Spring Nut/Channel Mount Base
- **4** - None (use when Stacking)
- **8** - Heavy Duty Weld Base

Fastner Type Detail:

Hex Head Screw & Washer *- Fastener Type - **1*** *(3rd digit of TIER CODE)*	
Stack Stud & Nut *- Fastner Type - **7*** *(3rd digit of TIER CODE)*	

Base Type Detail:

Weld Base *- Base Type - **1*** *(1st digit of TIER CODE)*	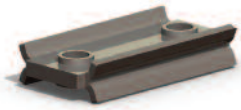
Spring Nut Base *- Base Type - **3*** *(1st digit of TIER CODE)* *(for use with anchor Channel Mounting)*	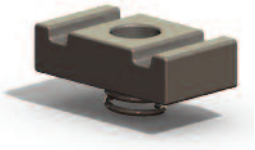
Heavy Duty Weld Base *- Base Type - **8*** *(1st digit of TIER CODE)*	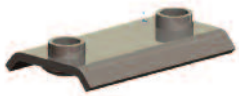

Retainer Type Detail:

Clamp Plate *- Retainer Type - **1*** *(2nd digit of TIER CODE)* *(Clamp Plate has .33" round holes)*	
Clamp Plate/Stack Plate *- Retainer Type - **2*** *(2nd digit of TIER CODE)* *(Stack Plate has .33" square holes)* *(Clamp Plate has .33" round holes)*	
Double Stack Plate *- Retainer Type - **6*** *(2nd digit of TIER CODE)* *(Stack Plate has .33" square holes)*	
Double Lock Plate *- Retainer Type - **7*** *(2nd digit of TIER CODE)* *(Lock Plate has .44" 12 point holes)*	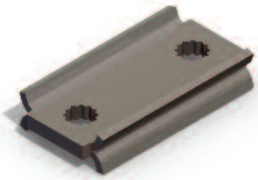

5

Single Tier Arrangements: *(Most Common Arrangements)*

Drill and Tap Mounting

TIER CODE: 0111

Standard Weld Base Mounting

TIER CODE: 1111

Heavy Duty Weld Base Mounting *(New Style)*

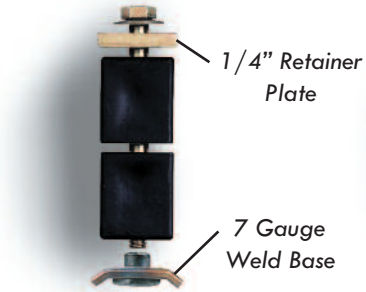

TIER CODE: 8111

Spring Nut Mounting
(channel not included)

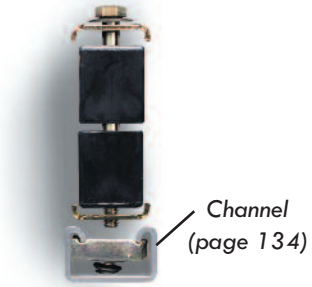

TIER CODE: 3211

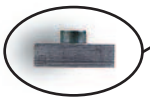

Old Style Weld Base *- available as special order (3/8" steel weld*

TIER CODE: 6111

Multi Tier Arrangements: *(Most Common Arrangements)*

The most common method of stacking the **521, 524, 531** and the **532** Series assemblies is shown at the right. The part number for each cushion assembly is required. ***IE.*** *to order a Series 521 Double Tiered assembly for .25" tube and .37" tube with retainer plates between tiers, the part numbers would be:*

MMC-521012T-1112 - for the .375" Tube mounted on the top.

MMC-521008T-0600 - for the .250" Tube mounted on the bottom with a standard weld base.

Without the retainer plates (as shown at far right), the part number for the bottom would be:

MMC-521008T-0000

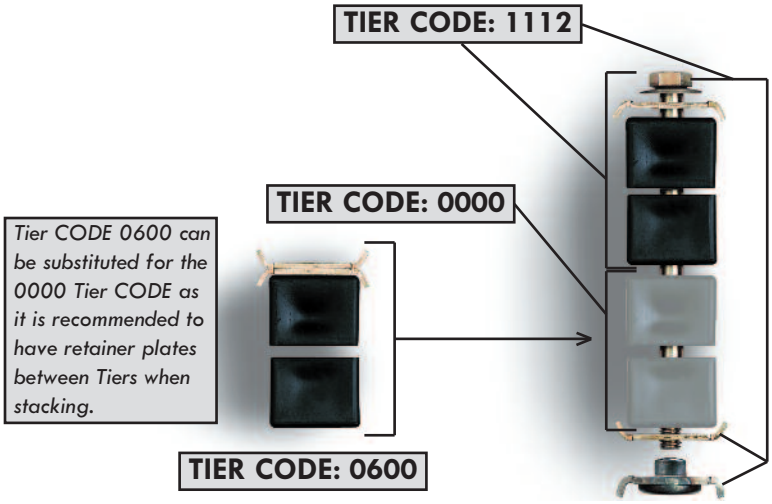

The most common method of stacking the **541, 542,** and the **561** Series assemblies is shown at the right. The part number for each cushion assembly is required. ***IE.*** *to order a Series 542 Double Tiered assembly for 1/2" pipe and 3/4" pipe, the part numbers would be:*

MMC-542024P-4111 - for the 3/4" Pipe mounted on the top.

MMC-542016P-1771 - for the 1/2" Pipe mounted on the bottom with a standard weld base.

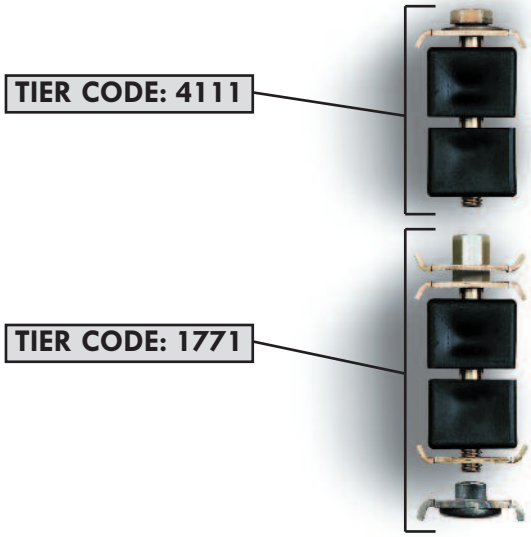

magnaloy coupling company *501 Commerce Drive Alpena, MI 49707* ***989 356-2186***
A Division of Douville Johnston Corporation *Fax: 989 354-4190* *http://www.magnaloy.com*

Internally Mounted Tank Filters - your front-line defense against particle contamination

Features:

- Die cast aluminum end covers.
- By-Pass valve available on most models(see tables).
- End caps are designed to provide a positive interlock with epoxy bond to prevent leakage.
- Rated flow capacity at 5 ft/sec.
- Suitable with all petroleum base oils and fire retardant hydraulic fluids, coolants and lubricants.

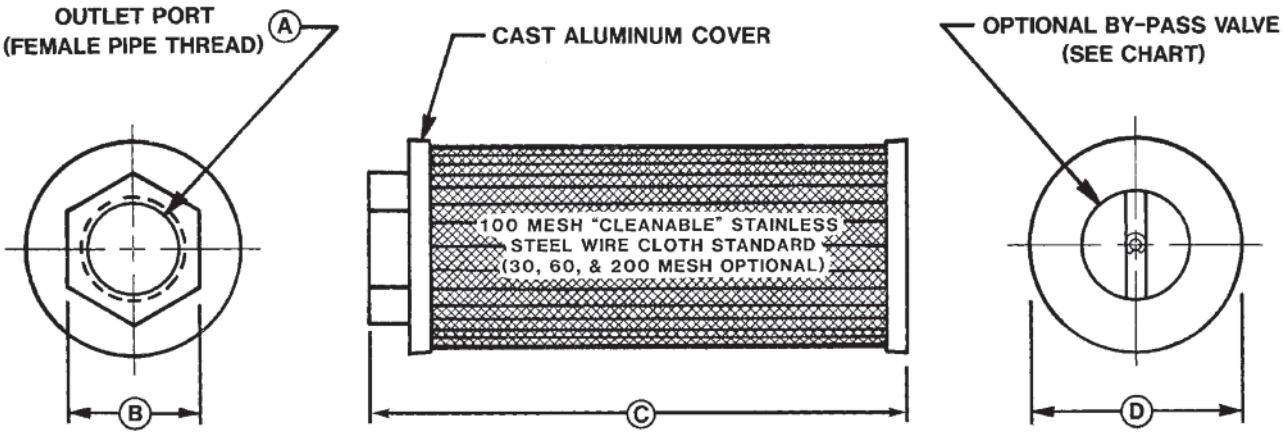

Part Number	A Outlet Port	B Wrench Flat	C Overall Length	D Outside Diameter	Rated Flow @ 5 ft/sec
SS-003P006-1-0[1]	3/8" NPT	1.20"	3.00"	2.75"	3 GPM
SS-005P008-1-X[1]	1/2" NPT	1.20"	3.25"	2.75"	5 GPM
SS-008P012-1-X[1]	3/4" NPT	1.50"	3.25"	2.75"	8 GPM
SS-010P100-1-X[1]	1" NPT	1.75"	5.50"	2.75"	10 GPM
SS-023P104-X-X	1 1/4" NPT	2.25"	6.60"	3.20"	23 GPM
SS-032P108-X-X	1 1/2" NPT	2.35"	8.60"	3.20"	32 GPM
SS-053P200-X-X	2" NPT	3.00"	7.20"	4.20"	53 GPM
SS-075P208-X-X	2 1/2" NPT	3.50"	9.30"	4.20"	75 GPM

1 - Standard 100 Mesh, contact factory for other Mesh sizes.

How to Order:

SS-003P006-1-0

Model Code
003P006
005P008
008P012
014P100
023P104
032P108
053P200
075P208

Code	By-Pass Valve Setting
0	No By-Pass Valve
3	3 PSI
5	5 PSI

Code	Wire Cloth Mesh
1	100 Mesh (Std)
2	200 Mesh
3	30 Mesh
6	60 Mesh

Externally Mounted Tank Filters - your front-line defense against particle contamination

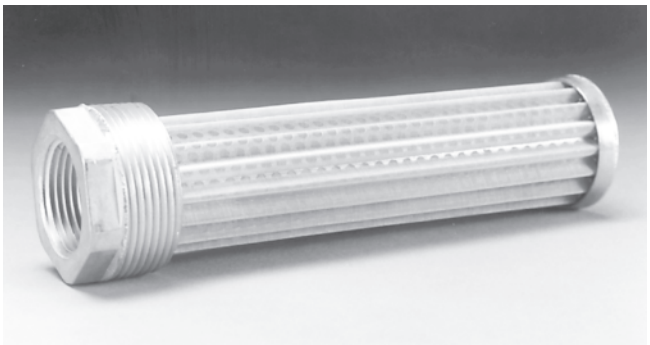

Features:

- Die cast aluminum end covers.
- By-Pass valve available on most models(see tables).
- End caps are designed to provide a positive interlock with epoxy bond to prevent leakage.
- Rated flow capacity at 5 ft/sec.
- Suitable with all petroleum base oils and fire retardant hydraulic fluids, coolants and lubricants.

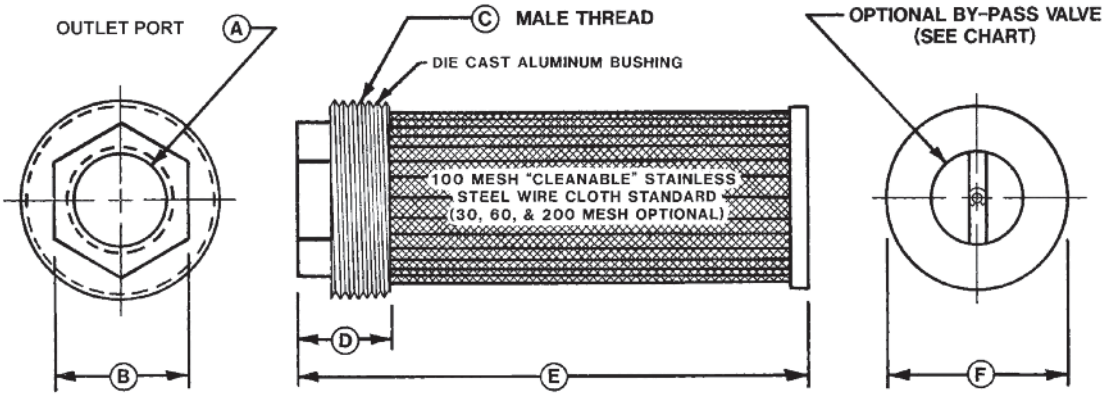

Part Number	A Outlet Port	B Hex Size	C Male Thread	D Fitting Length	E Overall Length	F Cover Diameter	Rated Flow @ 5 ft/sec
SS-008P012/P104-X-X	3/4" NPT	1.50"	1 1/4" NPT	1.10"	6.90"	1.50"	8 GPM
SS-014P100/P108-X-X	1" NPT	1.75"	1 1/2" NPT	1.10"	6.90"	1.70"	14 GPM
SS-014P100/P300-X-X	1" NPT	2.50"	3" NPT	1.50"	4.70"	3.20"	14 GPM
SS-014S020/P300-X-X	#20 SAE	2.50"	3" NPT	1.50"	8.70"	3.20"	14 GPM
SS-021S024/P300-X-X	#24 SAE	2.50"	3" NPT	1.50"	8.70"	3.20"	21 GPM
SS-023P104/P200-X-X	1 1/4" NPT	2.10"	2" NPT	1.20"	9.10"	2.20"	23 GPM
SS-023P104/P300-X-X	1 1/4" NPT	2.50"	3" NPT	1.50"	6.70"	3.20"	23 GPM
SS-032P108/P300-X-X	1 1/2" NPT	2.50"	3" NPT	1.50"	8.70"	3.20"	32 GPM
SS-053P200/P300-X-X	2" NPT	3.06"	3" NPT	1.60"	8.80"	3.20"	53 GPM
SS-053P200/P400-X-X	2" NPT	4.13"	4" NPT	1.80"	7.70"	4.20"	53 GPM
SS-075P208/P400-X-X	2 1/2" NPT	4.13"	4" NPT	2.10"	9.70"	4.20"	75 GPM

5

How to Order:

SS-008P012/P104-1-0

Model Code
008P012/P104
014P100/P108
014P100/P300
014S020/P300
021S024/P300
023P104/P200
023P104/P300
032P108/P300
053P200/P300
053P200/P400
075P208/P400

Code	By-Pass Valve Setting
0	No By-Pass Valve
3	3 PSI
5	5 PSI

Code	Wire Cloth Mesh
1	100 Mesh (Std)
2	200 Mesh
3	30 Mesh
6	60 Mesh

magnaloy coupling company *501 Commerce Drive Alpena, MI 49707* ***989 356-2186***
A Division of Douville Johnston Corporation *Fax: 989 354-4190* *http://www.magnaloy.com*

Tank Diffusers

Internally Mounted Tank Diffusers - evenly disperses return line fluid for heat dissipation and prevents fluid aeration.

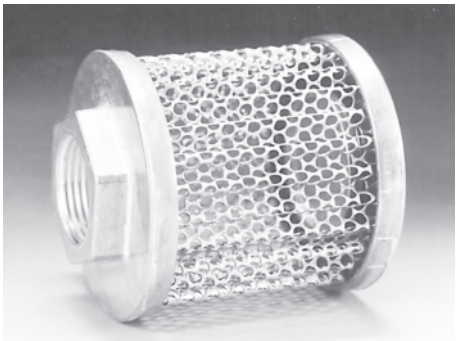

Features:

- Die cast aluminum end covers.
- End caps are designed to provide a positive interlock with epoxy bond to prevent leakage.
- Rated flow capacity at 15 ft/sec.
- Suitable with all petroleum base oils and fire retardant hydraulic fluids, coolants and lubricants.

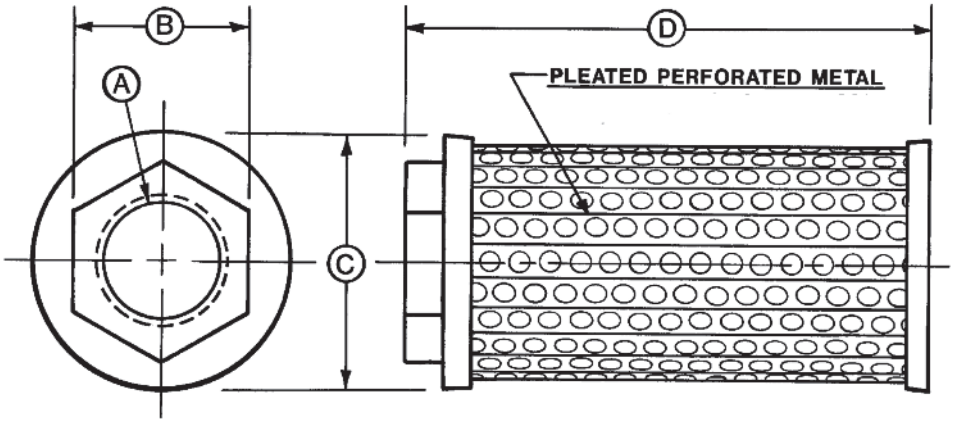

Part Number	A Outlet Port	B Wrench Flat	C Outside Diameter	D Overall Length	Rated Flow @ 15ft/sec	Area Ratio *
TD-014P008-D1	1/2" NPT	1.20"	1.30"	3.00"	14 GPM	16:1
TD-014P008-D2	1/2" NPT	1.13"	3.20"	2.30"	14 GPM	35:1
TD-025P012-D1	3/4" NPT	1.50"	1.70"	3.90"	25 GPM	18:1
TD-025P012-D2	3/4" NPT	1.75"	3.20"	2.20"	25 GPM	20:1
TD-040P100-D1	1" NPT	1.75"	1.90"	4.90"	40 GPM	19:1
TD-040P100-D2	1" NPT	1.75"	3.20"	3.60"	40 GPM	27:1
TD-070P104-D1	1 1/4" NPT	2.25"	3.20"	4.60"	70 GPM	22:1
TD-095P108-D1	1 1/2" NPT	2.25"	3.20"	5.60"	95 GPM	21:1
TD-157P200-D1	2" NPT	3.00"	4.20"	6.20"	157 GPM	17:1
TD-224P208-D1	2 1/2" NPT	3.50"	4.20"	10.30"	224 GPM	22:1

* Ratio Area is the Ratio of the Perforated Metal Open Area to the Pipe Internal Area.

Spin-On Filter Head with ΔP Indicator Option:

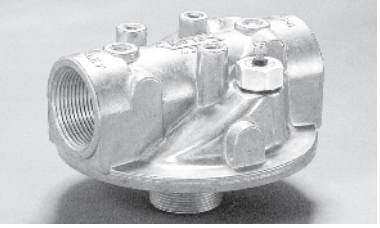

Features:

- Flow Rates up to 70 GPM on Return (25 GPM Suction).
- Port Sizes 1 1/4" NPT, #20 SAE, or 1 1/4" BSPT.
- Maximum Operating Pressure of 200 PSI (***Warning:*** *80 PSI ΔP maximum without by-pass valve*).
- Maximum Operating Temperature of 250° F.
- Suitable for Petroleum based fluids only (consult factory for synthetic fluids).

Average Pressure Drop Through Clean Filter Assembly with 150 SUS Oil at 105° F.

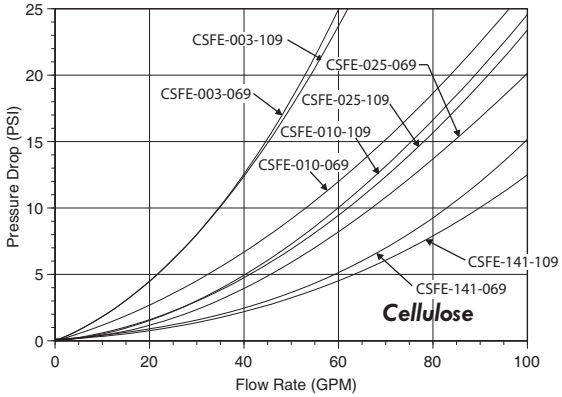

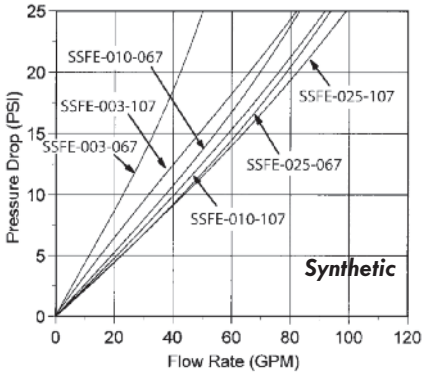

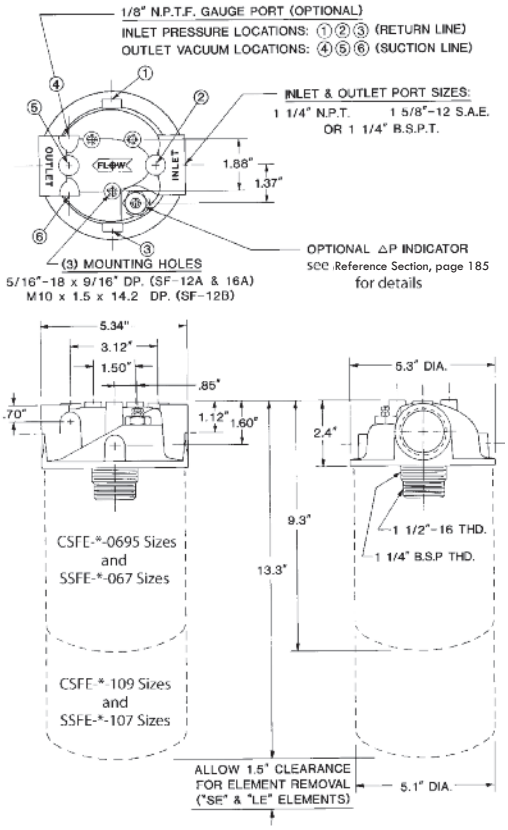

How to Order:

SFH-P104/00-0-0-00

Code	Port Size & Type	
	Inlet Port	Outlet Port
P104	1 1/4" NPT	1 1/4" NPT
S020	#20 SAE	#20 SAE
B104	1 1/4" BSPT	1 1/4" BSPT

Code	By-Pass Valve Setting
00	No By-Pass
03	3 PSI
05	5 PSI
15	15 PSI
25	25 PSI
50	50 PSI

Code	Gauge Port Location (see above)
0	No Gauge Port
1,2,3	Inlet Pressure (Return Line)
4,5,6	Outlet Vacuum (Suction Line)

Code	ΔP Indicator Setting
00	No Indicator
04	4 PSID
13	13 PSID
22	22 PSID
44	44 PSID

Code	Indicator Option	Indicator Series
O	No Indicator	None
V	Visual Indicator	DP03 Series
E	DC Electric Single Wire	DP06 Series
B	Vis/Elec w/DIN Conn.	DP05 Series

magnaloy coupling company *501 Commerce Drive Alpena, MI 49707* ***989 356-2186***

A Division of Douville Johnston Corporation *Fax: 989 354-4190* *http://www.magnaloy.com*

Spin-On Filter Elements

Application Data:

- Maximum Operating Pressure: 200 PSI All Models (***Warning:*** *80 PSI ΔP maximum without by-pass valve in Filter Head*).
- Operating Temperature: -65^0 F to 250^0 F.
- Fluid Compatability: Suitable for Petroleum based fluids only (consult factory for synthetic fluids.
- Gasket: Buna N Gasket Standard, fluorocarbon Gasket optional, consult factory.
- Filter Element Interchange: Consult factory or local distributor for information.
- Internal Combustion Engines: ***CAUTION!*** *Do Not Use SFE or SSFE Series filter elements on IC Engines.*
- Reference: 2/20/75 $Beta_x$ Rating - see Reference Section, page 186 for more information

  $Beta_x$ Rating of 2 = 50% Efficiency (Nominal Rating)
  $Beta_x$ Rating of 20 = 95% Efficiency
  $Beta_x$ Rating of 75 = 98.7% Efficiency (Absolute Rating)

Spin-On Filter Elements

Cellulose Media Series: For use with Magnaloy SHF Series Spin-On Filter Head

Part Number	Outside Diameter	Mounting Thread	Micron Rating	Beta Rating (see below)	Filter Media Area	Color Can/Imprint	Water Holding Capacity	Overall Length
CSFE-003-069	5.1”	1 1/2-16 UN	3 Micron	3/10/22	850 in^2	White/Green		6.9”
CSFE-010-069	5.1”	1 1/2-16 UN	10 Micron	9/22/24	950 in^2	White/Red		6.9”
CSFE-025-069	5.1”	1 1/2-16 UN	25 Micron	29/46/54	950 in^2	White/Black		6.9”
CSFE-141-069	5.1”	1 1/2-16 UN	141 Micron		200 in^2	White/Blue		6.9”
CSFE-003-109	5.1”	1 1/2-16 UN	3 Micron	3/10/22	1170 in^2	White/Green		10.9”
CSFE-003-109/WA	5.1”	1 1/2-16 UN	3 Micron	5/21/23	648 in^2	White/Orange	15 oz.	10.9”
CSFE-010-109	5.1”	1 1/2-16 UN	10 Micron	10/22/33	1710 in^2	White/Red		10.9”
CSFE-010-109/WA	5.1”	1 1/2-16 UN	10 Micron	8/25/30	648 in^2	White/Orange	15 oz.	10.9”
CSFE-025-109	5.1”	1 1/2-16 UN	25 Micron	29/46/54	1710 in^2	White/Black		10.9”
CSFE-141-109	5.1”	1 1/2-16 UN	141 Micron		380 in^2	White/Blue		10.9”

5

Synthetic Media Series: (Z-Glass Media) For use with Magnaloy SHF Series Spin-On Filter Head

Part Number	Outside Diameter	Mounting Thread	Micron Rating	Beta Rating (see below)	Filter Media Area	Color Can/Imprint	Water Holding Capacity	Overall Length
SSFE-003-067	5.1”	1 1/2-16 UN	3 Micron	2/3/4	680 in^2	White/Green		6.7”
SSFE-010-067	5.1”	1 1/2-16 UN	10 Micron	4/10/12	561 in^2	White/Red		6.7”
SSFE-025-067	5.1”	1 1/2-16 UN	25 Micron	8/25/30	673 in^2	White/Black		6.7”
SSFE-003-107	5.1”	1 1/2-16 UN	3 Micron	2/3/4	1260 in^2	White/Green		10.7”
SSFE-010-107	5.1”	1 1/2-16 UN	10 Micron	4/10/12	1041 in^2	White/Red		10.7”
SSFE-025-107	5.1”	1 1/2-16 UN	25 Micron	8/25/30	1246 in^2	White/Black		10.7”

Integral Tank Breather Series

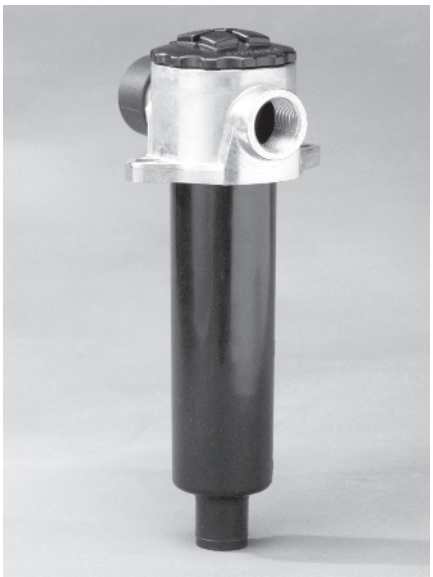

Features:

- Flow Rates up to 25 GPM (Return)
- Port Sizes: 1/2" NPT, 3/4" NPT
  #8 SAE, #12 SAE
  1/2" BSPT, 3/4" BSPT
- Maximum Operating Pressure of 100 PSI *(300 PSI Burst pressure) 25 PSI By-Pass included.*
- Operating Temperature Range: -15^0 F of 230^0 F.
- Head Material: Die Cast Aluminum Alloy
- Bowl/Cover Material: Nylon
- Breather: 10 Micron Foam (Standard)
- Suitable for Petroleum based fluids only (consult factory for synthetic fluids).

How to Order:

TTF-ITB-P008-0

Series: Integral Tank Breather

Code	Port Size	Code	Port Size
P008	1/2" NPT	S012	#12 SAE
P012	3/4" NPT	B008	1/2" BSP
S008	#8 SAE	B012	3/4" BSP

Code	Dipstick Option
0	No Dipstick
D	w/Dipstick (9.84"length)

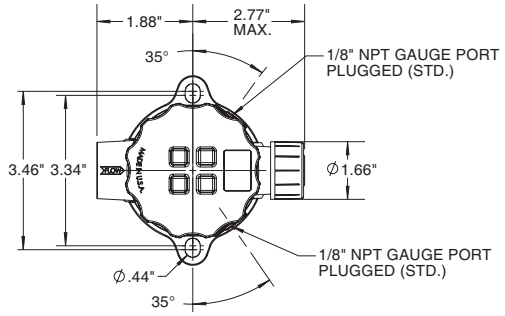

INSTALLATION LAYOUT

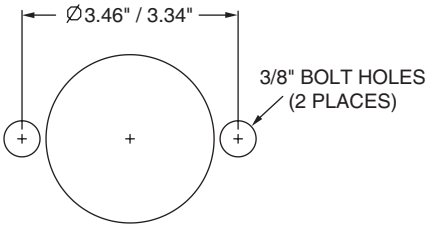

2.5" / 2.4" DIA.

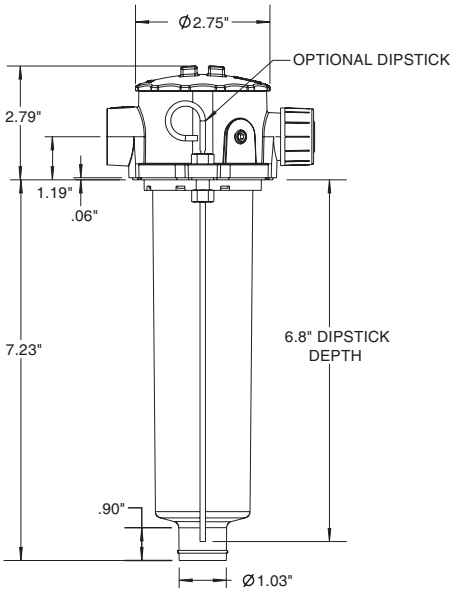

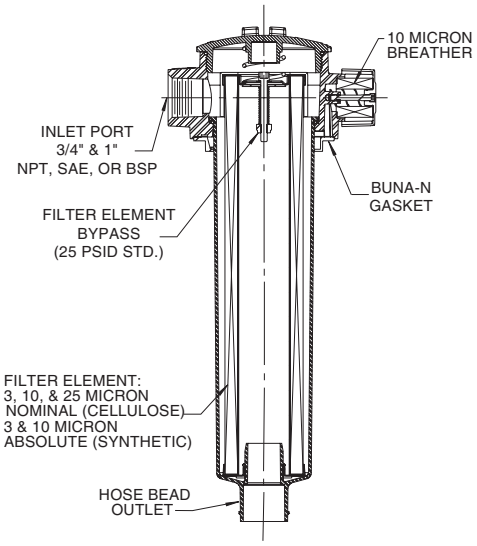

magnaloy coupling company *501 Commerce Drive Alpena, MI 49707* ***989 356-2186***

A Division of Douville Johnston Corporation *Fax: 989 354-4190* *http://www.magnaloy.com*

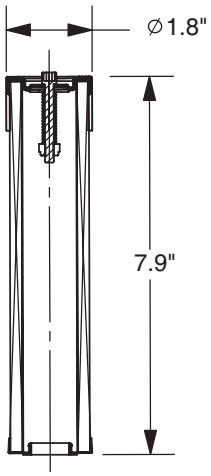

Average Pressure Drop through clean assembly with 150 SUS Oil at 105^0 F

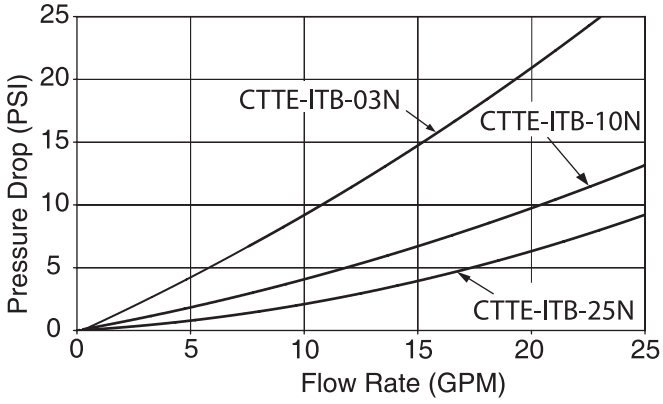

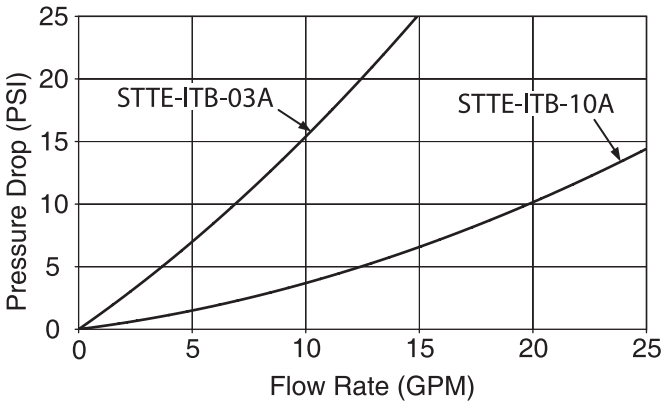

5

Tank Top Filter Elements

Cellulose Media Series: for use with Magnaloy Series TTF-ITB Tank Top Filter Head

Part Number	Micron Rating	Media Type	Filtration Rating
CTTE-ITB-03N	3 Nominal	Cellulose	$Beta_3 = 5.3$
CTTE-ITB-10N	10 Nominal	Cellulose	$Beta_{10} = 5.3$
CTTE-ITB-25N	25 Nominal	Cellulose	$Beta_{25} = 2.9$

Synthetic Media Series: (Z-Glass Media) for use with Magnaloy Series TTF-ITB Tank Top Filter Head

Part Number	Micron Rating	Media Type	Filtration Rating
STTE-ITB-03A	3 Absolute	Z Glass Synthetic	$Beta_3 = 200$
STTE-ITB-10A	10 Absolute	Z Glass Synthetic	$Beta_{10} = 200$

Suction/Return Line Series

Features:

- Flow Rates: Aluminum Housing; 96 GPM (Return), 32 GPM (Suction)
  Steel Housing; 71 GPM (Return), 24 GPM (Suction)
- Port Sizes: 1 1/4" NPT, 1 1/2" NPT
  #20 SAE, #24 SAE
  1 1/4" BSPT
- Maximum Operating Pressure: 100 PSI (***Warning:*** *80 PSI ΔP maximum without by-pass valve in Filter Head*).
- Operating Temperature: up to 250° F.
- Material: Die Cast Aluminum Alloy or Steel
- Unitized cover and By-Pass Valve assembly - no parts to loose.
- Drop-in Element Bowl design for easy installation
- Patented element bowl hold down for suction applications.
- Radial seal design used in CTTE and STTE series filter elements
- O-Ring seal between filter housing and tank top
- Suitable for Petroleum based fluids only (consult factory for synthetic fluids).

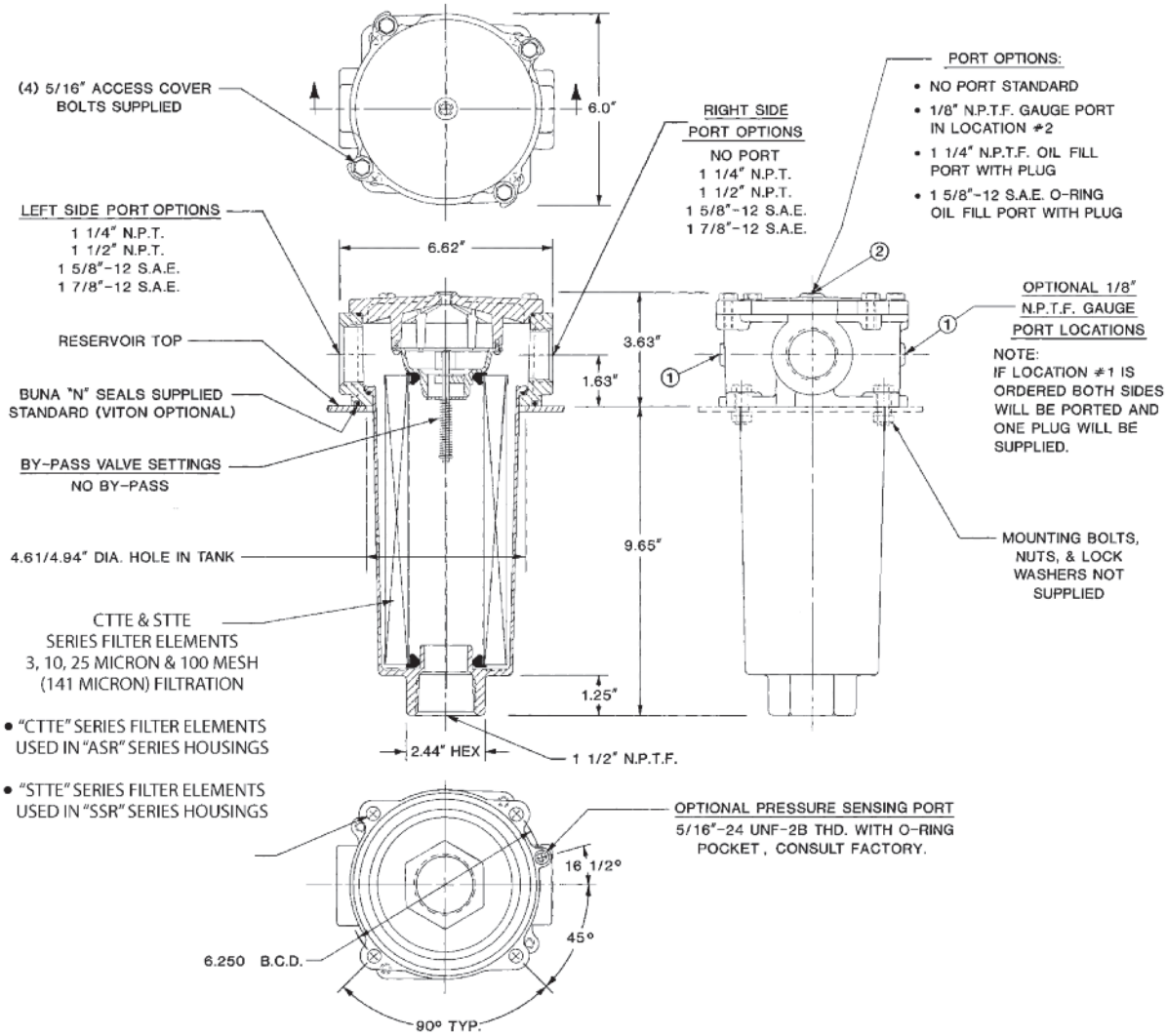

magnaloy coupling company *501 Commerce Drive Alpena, MI 49707* ***989 356-2186***
A Division of Douville Johnston Corporation *Fax: 989 354-4190* *http://www.magnaloy.com*

How to Order: **TTF-ASR-P104/P104-03-10-0**

Code	Material/Series
ASR	Aluminum Suction/Return
SSR	Steel Suction/Return

Code	Port Size & Type	
	Left Side Port	Right Side Port
P104/000	1 1/4" NPT	None
B104/000	1 1/4" BSPT	None
P104/P104	1 1/4" NPT	1 1/4" NPT
B104/B104	1 1/4" BSPT	1 1/4" BSPT
P108/000	1 1/2" NPT	None
P108/P104	1 1/2" NPT	1 1/4" NPT
P108/P108	1 1/2" NPT	1 1/2" NPT
S020/000	#20 SAE	None
S020/S020	#20 SAE	#20 SAE
S024/000	#24 SAE	None
S024/S024	#24 SAE	#24 SAE

Code	Check Valve Option
0	No Check Valve
V	with Check Valve

Code	Gauge & Oil Fill Port Location
10	Gauge Port in Location 1, No Oil Fill Port
12	Gauge Port in Location 1&2, No Oil Fill Port
1P	Gauge Port in Location 1, 1 1/4" NPT Fill Port with Plug
1S	Gauge Port in Location 1, #12 SAE Fill Port with Plug

Code	By-Pass Valve Option
00	No By-Pass
03	3 PSI By-Pass (Suction)
05	5 PSI By-Pass (Suction)
15	15 PSI By-Pass (Return)
25	25 PSI By-Pass (Return)
50	50 PSI By-Pass (Return)

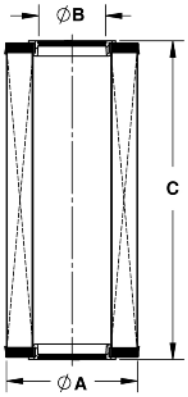

Magnetic Elements

Part Numbers
CTTE-ASR-100-092-OI/M
CTTE-ASR-100-092-IO/M

Three - 4" diameter x 5/8" thick ceramic magnets

Four - 100 mesh wire cloth filter sections

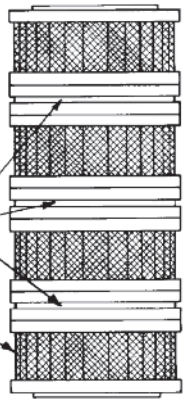

Cellulose Media Series: for use with Magnaloy Series TTF-ASR Tank Top Filter

Part Number	Filtration Rating	Filtration Rating	Filter Media Area	A OD	B ID	C Length	Flow Direction Thru Element
CTTE-ASR-003-092-BD	$Beta_3 = 5.3$	$Beta_{10} = 75$	1120 in^2	3.91"	1.96"	9.19"	Bi-Directional
CTTE-ASR-003-092-OI/WA**	$Beta_3 = 5.3$	$Beta_{10} = 75$	461 in^2	3.91"	1.96"	9.19"	Outside to Inside
CTTE-ASR-010-092-BD	$Beta_{10} = 5.3$	$Beta_{22} = 75$	1120 in^2	3.91"	1.96"	9.19"	Bi-Directional
CTTE-ASR-025-092-BD	$Beta_{25} = 2.9$	$Beta_{47} = 20$	1120 in^2	3.91"	1.96"	9.19"	Bi-Directional
CTTE-ASR-010-182-BD	$Beta_{10} = 5.3$	$Beta_{22} = 75$	2240 in^2	3.91"	1.96"	18.19"	Bi-Directional
CTTE-ASR-025-182-BD	$Beta_{25} = 2.9$	$Beta_{47} = 20$	2240 in^2	3.91"	1.96"	18.19"	Bi-Directional
CTTE-ASR-100-092-OI*	141 Micron		151 in^2	3.91"	1.96"	9.19"	Outside to Inside
CTTE-ASR-100-092-IO*	141 Micron		151 in^2	3.91"	1.96"	9.19"	Inside to Outside
CTTE-ASR-100-092-OI/M*	141 Micron		109 in^2	3.91"	1.96"	9.19"	Outside to Inside
CTTE-ASR-100-092-IO/M*	141 Micron		109 in^2	3.91"	1.96"	9.19"	Inside to Outside
CTTE-ASR-100-182-OI*	141 Micron		2240 in^2	3.91"	1.96"	18.19"	Outside to Inside

5

Synthetic Media Series: for use with Magnaloy Series TTF-ASR Tank Top Filter

Part Number	Filtration Rating	Filtration Rating	Filter Media Area	A OD	B ID	C Length	Flow Direction Thru Element
STTE-ASR-003-092-OI	$Beta_3 > 200$		825 in^2	3.91"	1.96"	9.19"	Outside to Inside
STTE-ASR-010-092-OI	$Beta_{10} > 200$		825 in^2	3.91"	1.96"	9.19"	Outside to Inside
STTE-ASR-003-182-OI	$Beta_3 > 200$		1650 in^2	3.91"	1.96"	18.19"	Outside to Inside
STTE-ASR-010-182-OI	$Beta_{10} > 200$		1650 in^2	3.91"	1.96"	18.19"	Outside to Inside

Note:
* 100 Mesh Stainless Steel Wire Cloth is standard for 141 Micron Elements, 30, 60 & 200 optional - consult factory
** Filter Elements CTTE-ASR-409-03-IO/WA & CTTE-ASR-409-10-OI/WA contain Aqua-Zorb (water absorbing) filter media.
ASR Elements come standard with a Buna-N radial seal, Fluorocarbon optional -consult factory

magnaloy coupling company 501 Commerce Drive Alpena, MI 49707 989 356-2186
A Division of Douville Johnston Corporation Fax: 989 354-4190 http://www.magnaloy.com

Average Pressure Drop through clean filter with 150 SUS Oil at 105^0 F

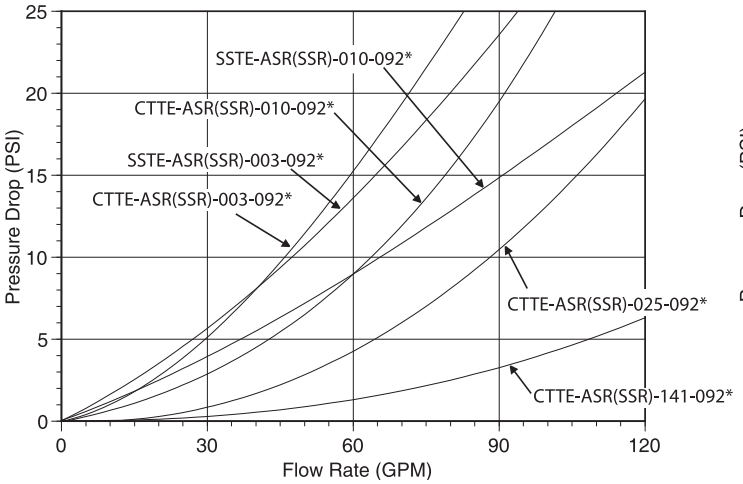

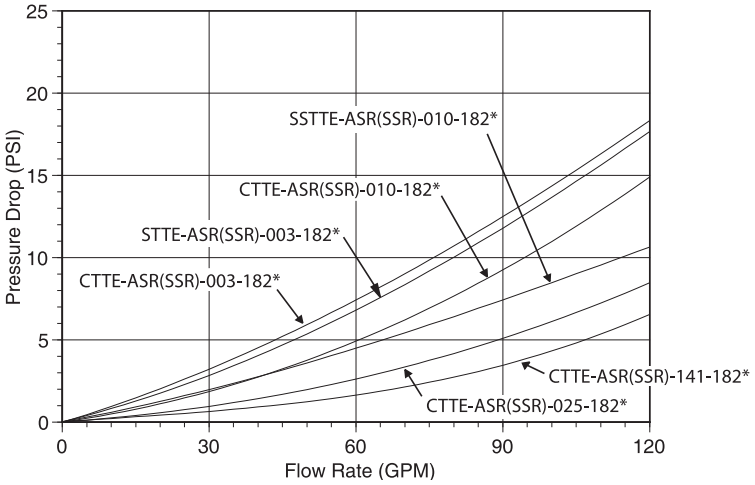

Cellulose Media Series: for use with Magnaloy Series TTF-SSR Tank Top Filter

Part Number	Filtration Rating	Filtration Rating	Filter Media Area	A OD	B ID	C Length	Flow Direction Thru Element
CTTE-SSR-003-092-BD	$Beta_3 = 5.3$	$Beta_{10} = 75$	1120 in^2	3.91”	1.61”	9.19”	Bi-Directional
CTTE-SSR-010-092-BD	$Beta_{10} = 5.3$	$Beta_{22} = 75$	1220 in^2	3.91”	1.61”	9.19”	Bi-Directional
CTTE-SSR-010-092-OI/WA**	$Beta_{10} = 5.3$	$Beta_{22} = 75$	461 in^2	3.91”	1.61”	9.19”	Outside to Inside
CTTE-SSR-025-092-BD	$Beta_{25} = 2.9$	$Beta_{47} = 20$	1120 in^2	3.91”	1.61”	9.19”	Bi-Directional
CTTE-SSR-010-182-BD	$Beta_{10} = 5.3$	$Beta_{22} = 75$	461 in^2	3.91”	1.61”	18.19”	Bi-Directional
CTTE-SSR-025-182-BD	$Beta_{25} = 2.9$	$Beta_{47} = 20$	2240 in^2	3.91”	1.61”	18.19”	Bi-Directional
CTTE-SSR-100-092-OI*	141 Micron		151 in^2	3.91”	1.61”	9.19”	Outside to Inside
CTTE-SSR-100-092-IO*	141 Micron		151 in^2	3.91”	1.61”	9.19”	Inside to Outside
CTTE-SSR-100-092-OI/M*	141 Micron		109 in^2	3.91”	1.61”	9.19”	Outside to Inside
CTTE-SSR-100-092-IO/M*	141 Micron		109 in^2	3.91”	1.61”	9.19”	Inside to Outside

Synthetic Media Series: for use with Magnaloy Series TTF-SSR Tank Top Filter

Part Number	Filtration Rating	Filtration Rating	Filter Media Area	A OD	B ID	C Length	Flow Direction Thru Element
STTE-SSR-003-092-OI	$Beta_3 > 200$		825 in^2	3.91”	1.61”	9.19”	Outside to Inside
STTE-SSR-010-092-OI	$Beta_{10} > 200$		825 in^2	3.91”	1.61”	9.19”	Outside to Inside
STTE-SSR-003-182-OI	$Beta_3 > 200$		1650 in^2	3.91”	1.61”	18.19”	Outside to Inside
STTE-SSR-010-182-OI	$Beta_{10} > 200$		1650 in^2	3.91”	1.61”	18.19”	Outside to Inside

Note:

* 100 Mesh Stainless Steel Wire Cloth is standard for 141 Micron Elements, 30, 60 & 200 optional - consult factory

** Filter Elements CTTE-SSR-409-03-IO/WA & CTTE-SSR-409-10-OI/WA contain Aqua-Zorb (water absorbing) filter media. SSR Elements come standard with a Buna-N radial seal, Fluorocarbon optional -consult factory

Liquid Filled Pressure Gauges - high quality construction, dampened movement, accurate readings

Bottom Stem Series

Features:

- Glycerine Filled (available Dry - consult factory)
- Built-in snubber dampens the effects of pressure pulsations
- Phosphor Bronze Bourdon Tube
- Plastic Lens Standard (Glass Available)
- Stainless Steel Case and Bezel (Brass Connection and Internal Parts)
- Accuracy: 2 1/2" Dial = ANSI GRADE A, 4" Dial = ANSI GRADE 1A
- Temperature Range: 30^0 F to 160^0 F Filled (-30^0 F to 180^0 F Dry)
- Dual Scale Readings in PSI and Bar (x100 = kPa)

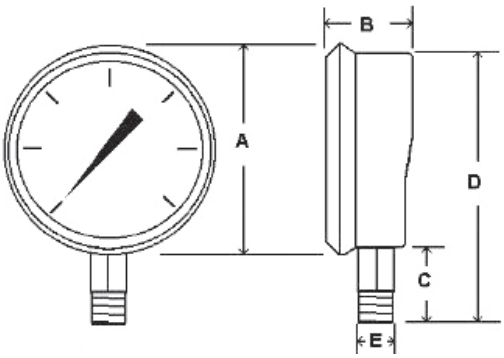

Code	Dial Range*	Major Increments*	Minor Increments*
03C	30/0/30 "Hg/PSI Compound	10 "Hg/PSI	1 "Hg/PSI
003	0/30 PSI	5 PSI	0.5 PSI
006	0/60 PSI	10 PSI	1 PSI
010	0/100 PSI	20 PSI	2 PSI
016	0/160 PSI	20 PSI	2 PSI
030	0/300 PSI	50 PSI	5 PSI
050	0/500 PSI	100 PSI	10 PSI
060	0/600 PSI	100 PSI	10 PSI
100	0/1000 PSI	200 PSI	20 PSI
150	0/1500 PSI	200 PSI	20 PSI
200	0/2000 PSI	400 PSI	50 PSI
300	0/3000 PSI	500 PSI	50 PSI
400	0/4000 PSI	500 PSI	50 PSI
500	0/5000 PSI	1000 PSI	100 PSI
600	0/6000 PSI	2000 PSI	200 PSI
10K	0/10,000 PSI	2000 PSI	200 PSI

Size	2 1/2" Dial		4" Dial	
Units	Inch	mm	Inch	mm
A	2.80	71	4.32	110
B	1.28	33	1.63	42
C	1.07	27	1.25	32
D	3.55	90	5.57	141
E	1/4" NPT		1/4" NPT	
			1/2" NPT	

* Compound Range reads 30 "Hg Vacuum to 30 PSI Pressure with the Major Dial Increments reading 10 "Hg or 10 PSI and the Minor Dial Increments reading 1 "Hg or 1 PSI. All other Gauges read in PSI only.

magnaloy coupling company *501 Commerce Drive Alpena, MI 49707* ***989 356-2186***

A Division of Douville Johnston Corporation *Fax: 989 354-4190* *http://www.magnaloy.com*

Rear Stem Series

Features:

- See Bottom Stem Series - same with exception below
- Accuracy: 2 1/2" Dial = 1.5% of Full Scale, 4" Dial = 1% of Full Scale

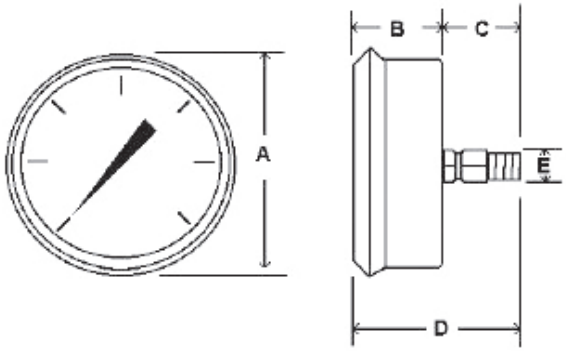

Code	Dial Range*	Major Increments*	Minor Increments*
03C	30/0/30 "Hg/PSI Compound	10 "Hg/PSI	1 "Hg/PSI
003	0/30 PSI	5 PSI	0.5 PSI
006	0/60 PSI	10 PSI	1 PSI
010	0/100 PSI	20 PSI	2 PSI
016	0/160 PSI	20 PSI	2 PSI
030	0/300 PSI	50 PSI	5 PSI
060	0/600 PSI	100 PSI	10 PSI
100	0/1000 PSI	200 PSI	20 PSI
150	0/1500 PSI	200 PSI	20 PSI
200	0/2000 PSI	400 PSI	50 PSI
300	0/3000 PSI	500 PSI	50 PSI
500	0/5000 PSI	1000 PSI	100 PSI
10K	0/10,000 PSI	1000 PSI	100 PSI

Size	2 1/2" Dial		4" Dial	
Units	Inch	mm	Inch	mm
A	2.80	71	4.32	110
B	1.28	33	1.63	42
C	1.18	30	1.14	29
D	2.46	63	2.77	71
E	1/4" NPTF		1/4" NPT	

* Compound Range reads 30 "Hg Vacuum to 30 PSI Pressure with the Major Dial Increments reading 10 "Hg or 10 PSI and the Minor Dial Increments reading 1 "Hg or 1 PSI. All other Gauges read in PSI only.

How to Order: **LFPG-400-003 04N/BS**

Code	Dial Face Diameter
208	2 1/2 inch
400	4 inch

Code	Dial Range
See Tables Above	

Code	Mounting Type
BS	Bottom Stem
RS	Rear Stem

Code	Fitting Thread
04N	1/4" NPT
08N	1/2" NPT *

* Available in Bottom Stem Series Only with 4" Dial

magnaloy coupling company *501 Commerce Drive Alpena, MI 49707* ***989 356-2186***
A Division of Douville Johnston Corporation *Fax: 989 354-4190* *http://www.magnaloy.com*

For Continuous reading of Fluid Level and Temperature

Standard Line - Liquid Column Series

Features:

- UV Resistant Transparent Dupont Grilamid Case
- All-Around Visibility of the Fluid Level
- Buna-N O-ring Seals
- Zinc Plated Bolts
- Available with Optional Cast Aluminum Cover to Provide additional breakage protection
- Includes Thermometer with Blue Fluid for easy readings
- 212^0 F Maximum Temperature Rating
- For use with Petroleum and Water Base Hydraulic Fluids, consult factory for other fluids

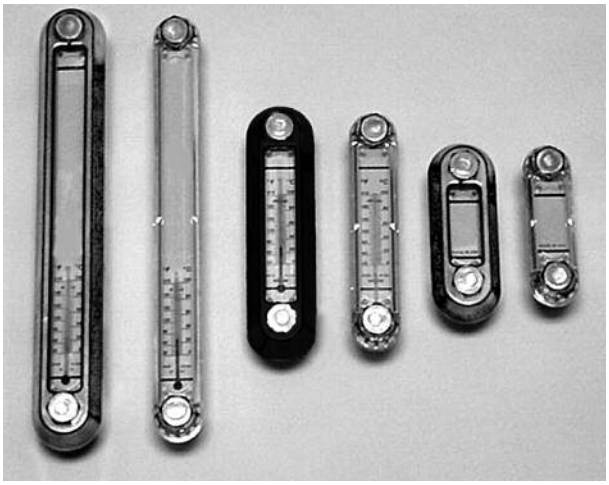

W/Out Cover

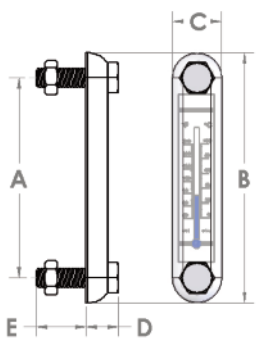

With Cover

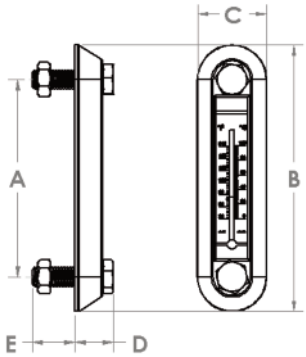

Part Number	Description	A	B	C	D	E
SLLG-03T	Std 3" w/temp	3.00"	4.22"	1.22"	0.81"	1.16"
SLLG-03T-C	Std 3" w/temp & Cover	3.00"	4.75"	1.75"	0.93"	0.82"
SLLG-05T	Std 5" w/temp	5.00"	6.22"	1.22"	0.81"	1.16"
SLLG-05T-C	Std 5" w/temp & Cover	5.00"	6.75"	1.75"	0.93"	0.82"
SLLG-10T	Std 10" w/temp	10.00"	11.22"	1.22"	0.81"	1.16"
SLLG-10T-C	Std 10" w/temp & Cover	10.00"	11.75"	1.75"	0.93"	0.82"

5

Premium Line - Liquid Column Series

Features:

- Borosilicate sight glass compatible with all hydraulic fluids and will not discolor
- 20 PSI maximum working pressure at 250^0 F
- May be front mounted by threaded tank holes or rear mounted with provided nuts
- Mounting bolts provide 1/16" alignment adjustment to facilitate installation
- Low profile body offers wide sight opening for visibility
- Machined from solid Aluminum bar stock
- Includes internal thermometer - external thermometer available - consult factory

Premium LLG Line

magnaloy coupling company *501 Commerce Drive Alpena, MI 49707* ***989 356-2186***
A Division of Douville Johnston Corporation *Fax: 989 354-4190* *http://www.magnaloy.com*

Premium Line (continued)

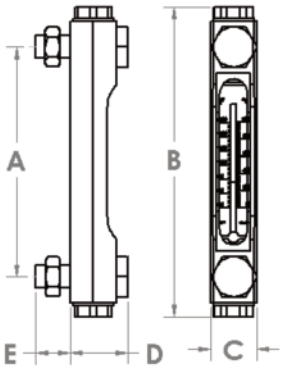

Part Number	Description	A	B	C	D	E
PLLG-03T	Premium 3” w/temp	3.00”	4.63”	1.00”	1.23”	0.75”
PLLG-05T	Premium 5” w/temp	5.00”	6.63”	1.00”	1.23”	0.75”
PLLG-10T	Premium 10” w/temp	10.00”	11.63”	1.00”	1.23”	0.75”

How to Order: **SLLG-03T-C-2**

Code	Series
SLLG	Standard Liquid Level Gauge
PLLG	Premium Liquid Level Gauge

Code	Bolt Center Distance
03	3”
05	5”
10	10”

Code	Mounting Bolt Option
Blank	1/2-13 UNC (1)
2	M12 x 1.75 Metric (2)
3	M10 x 1.50 Metric (2)

Code	Cover (Guard) Option
Blank	No Cover
C	with Cover (3)

Notes:
1 - 1/2-20 UNF with Premium Line
2 - Not Available with Premium Line
3 - Premium Line design incorporates integral gauge guard

Sight Glass Series

Features:
- Clear Nylon Fluid Level sight glass with Steel Collar for weld attachment to reservoir
- 400 PSI maximum working pressure
- Temperature Range: -65° F to 150° F for pressure applications
- For use with Petroleum Base and Water Base Hydraulic Fluids

Order Part Number: SLSG-100

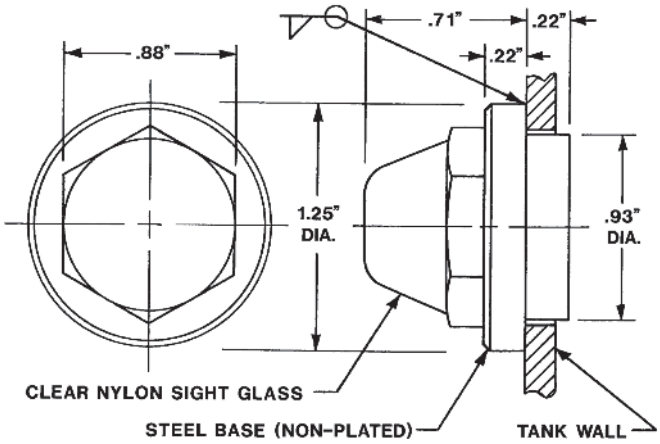

magnaloy coupling company *501 Commerce Drive Alpena, MI 49707* ***989 356-2186***
A Division of Douville Johnston Corporation *Fax: 989 354-4190* *http://www.magnaloy.com*

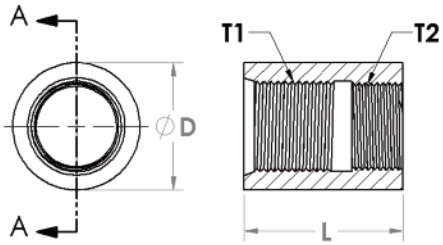

Full Couplings

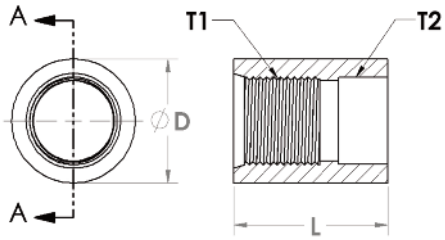

Socket Weld Full Couplings

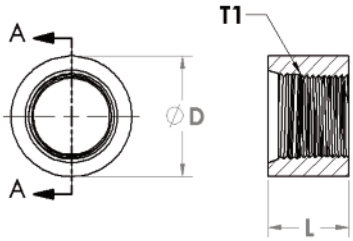

Half Couplings

SAE to NPT Full Couplings:

Part Number	D Diameter	L Length	T1 SAE Size	T1 Thread	T2 Thread
4S-4N	0.75	1.375	#4	7/16-20 UNF	1/4" NPT
6S-6N	1.00	1.50	#6	9/16-18 UNF	3/8" NPT
8S-8N	1.25	1.50	#8	3/4-16 UNF	1/2" NPT
10S-8N	1.25	1.50	#10	7/8-14 UNF	1/2" NPT
12S-12N	1.50	1.875	#12	1-1/16-12 UN	3/4" NPT
16S-16N	1.75	2.00	#16	1-5/16-12 UN	1" NPT

SAE to Socket Weld Full Couplings:

Part Number	D Diameter	L Length	T1 SAE Size	T1 Thread	T2 Socket
8S-8W	1.25	1.50	#8	3/4-16 UNF	1/2" Pipe
10S-8W	1.25	1.50	#10	7/8-14 UNF	1/2" Pipe
12S-12W	1.50	1.875	#12	1-1/16-12 UN	3/4" Pipe
16S-16W	1.75	2.00	#16	1-5/16-12 UN	1" Pipe
20S-20W	2.00	2.25	#20	1-5/8-12 UN	1-1/4" Pipe
24S-24W	2.50	2.375	#24	1-7/8-12 UN	1-1/2" Pipe

SAE Half Couplings:

Part Number	D Diameter	L Length	T1 SAE Size	T1 Thread	T2 Thread
4S	0.75	0.75	#4	7/16-20 UNF	N/A
6S	1.00	0.75	#6	9/16-18 UNF	N/A
8S	1.25	0.75	#8	3/4-16 UNF	N/A
10S	1.25	0.875	#10	7/8-14 UNF	N/A
12S	1.50	1.00	#12	1-1/16-12 UN	N/A
16S	1.75	1.25	#16	1-5/16-12 UN	N/A
20S	2.00	1.25	#20	1-5/8-12 UN	N/A
24S	2.50	1.25	#24	1-7/8-12 UN	N/A

magnaloy coupling company *501 Commerce Drive Alpena, MI 49707* ***989 356-2186***
A Division of Douville Johnston Corporation *Fax: 989 354-4190* *http://www.magnaloy.com*

Motor Dampening Bars

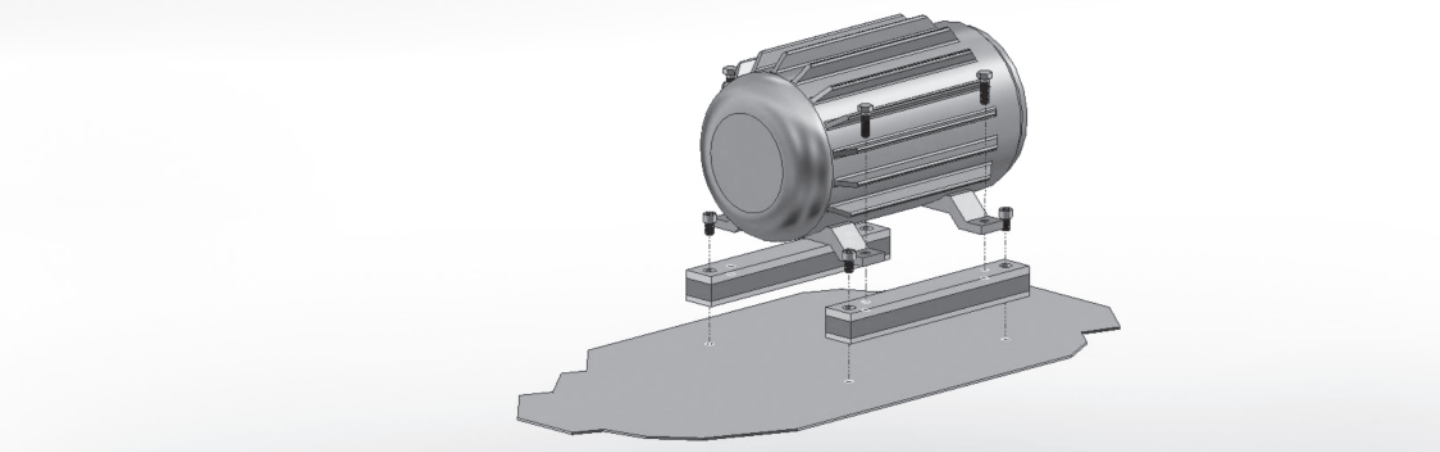

Features:

- Reduces noise and vibrations
- Available to accommodate NEMA frame sizes 056C thru 405TC (Metric sizes available - consult factory)
- Strong vulcanized rubber-to-metal bond results in no metal-to-metal contact
- Bolt down or weld in place for easy installation directly to tank top
- Weld pads are available for simple safe mounting option
- Supplied in sets of two (2) bars for each motor

Bolt Down Series:

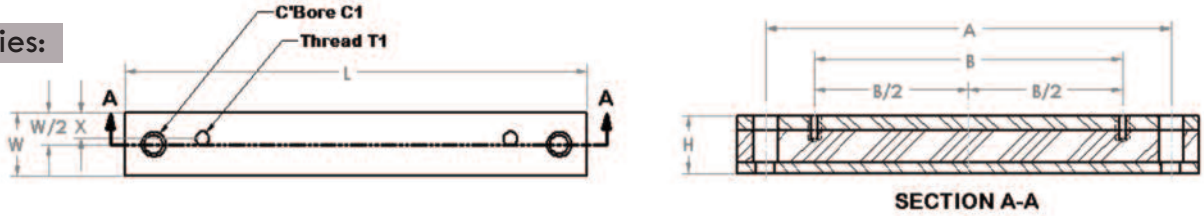

Part Number	Motor Frame	Dampening Bar Dimensions (inches)							
		L	W	H	A	B	X	C1 for	T1
MDB056-B	056C	7.25	1.97	1.57	5.75	3.0	.875	1/2-13	5/16-18
MDB143-B	143TC	7.75	1.97	1.57	6.25	4.0	.812	1/2-13	5/16-18
MDB145-B	145TC	8.75	1.97	1.57	7.25	5.0	.812	1/2-13	5/16-18
MDB182-B	182TC	8.75	1.97	1.57	7.25	4.5	.938	1/2-13	3/8-16
MDB184-B	184TC	9.75	1.97	1.57	8.25	5.5	.938	1/2-13	3/8-16
MDB213-B	213TC	10.0	1.97	1.57	8.50	5.5	.938	1/2-13	3/8-16
MDB215-B	215TC	11.5	1.97	1.57	10.0	7.0	.938	1/2-13	3/8-16
MDB254-B	254TC	13.0	1.97	1.77	11.5	8.25	.938	1/2-13	1/2-13
MDB256-B	256TC	14.75	1.97	1.77	13.25	10.0	.938	1/2-13	1/2-13
MDB284-B	284TC/TSC	14.5	2.76	2.36	12.75	9.5	1.125	5/8-11	1/2-13
MDB286-B	286TC/TSC	16.0	2.76	2.36	14.25	11.0	1.125	5/8-11	1/2-13
MDB324-B	324TC/TSC	16.0	3.00	2.36	14.0	10.5	1.562	3/4-10	5/8-11
MDB326-B	326TC/TSC	17.5	3.00	2.36	15.5	12.0	1.562	3/4-10	5/8-11
MDB364-B	364TC/TSC	17.0	3.00	2.36	15.0	11.25	1.562	3/4-10	5/8-11
MDB365-B	365TC/TSC	18.0	3.00	2.36	16.0	12.25	1.562	3/4-10	5/8-11
MDB404-B	404TC/TSC	19.5	3.94	2.36	17.25	12.25	2.0	1-8	3/4-10
MDB405-B	405TC/TSC	21.0	3.94	2.36	18.75	13.75	2.0	1-8	3/4-10
MDB444-B	444TC/TSC	23.0	4.72	2.36	20.75	14.5	2.375	1-8	3/4-10
MDB445-B	445TC/TSC	26.0	4.72	2.36	23.75	16.5	2.375	1-8	3/4-10

Weld Series:

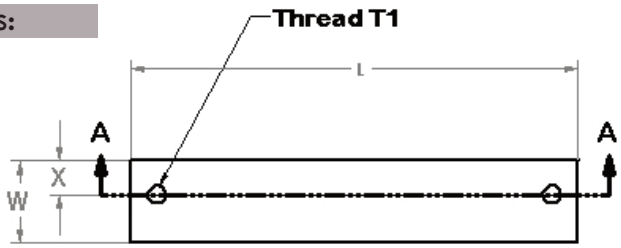

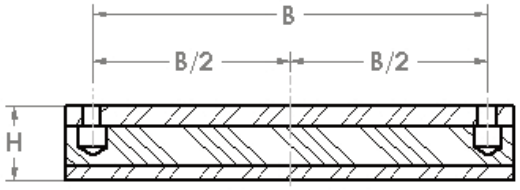

SECTION A-A

Part Number	Motor Frame	Dampening Bar Dimensions (inches)					
		L	W	H	B	X	T1
MDB056-W	056C	4.75	1.97	1.57	3.0	.875	5/16-18
MDB143-W	143TC	5.50	1.97	1.57	4.0	.812	5/16-18
MDB145-W	145TC	6.50	1.97	1.57	5.0	.812	5/16-18
MDB182-W	182TC	6.0	1.97	1.57	4.5	.938	3/8-16
MDB184-W	184TC	7.0	1.97	1.57	5.5	.938	3/8-16
MDB213-W	213TC	7.75	1.97	1.57	5.5	.938	3/8-16
MDB215-W	215TC	9.0	1.97	1.57	7.0	.938	3/8-16
MDB254-W	254TC	10.5	1.97	1.77	8.25	.938	1/2-13
MDB256-W	256TC	12.25	1.97	1.77	10.0	.938	1/2-13
MDB284W	284TC/TSC	12.0	2.76	2.36	9.5	1.125	1/2-13
MDB286-W	286TC/TSC	13.25	2.76	2.36	11.0	1.125	1/2-13
MDB324-W	324TC/TSC	12.5	3.00	2.36	10.5	1.562	5/8-11
MDB326-W	326TC/TSC	14	3.00	2.36	12.0	1.562	5/8-11
MDB364-W	364TC/TSC	13.5	3.00	2.36	11.25	1.562	5/8-11
MDB365-W	365TC/TSC	14.5	3.00	2.36	12.25	1.562	5/8-11
MDB404-W	404TC/TSC	15.5	3.94	2.36	12.25	2.0	3/4-10
MDB405-W	405TC/TSC	17.0	3.94	2.36	13.75	2.0	3/4-10
MDB444-W	444TC/TSC	19.5	4.72	2.36	14.5	2.375	3/4-10
MDB445-W	445TC/TSC	21.0	4.72	2.36	16.5	2.375	3/4-10

CAUTION !

Welding Directly to the Magnaloy Motor Dampening Bar can cause damage to the metal-to-rubber bond resulting in premature failure. Welding should be limited to the ends only (across the "W" dimension) to prevent damage to the rubber vulcanization by the heat generated during the welding process. Extreme care should be exercised whenever welding to assemblies containing vulcanized rubber. Bond Separation will occur if the metal/rubber surface interface reaches a temperature above 500 ^{0}F.

Magnaloy offers a solution to this situation - the **Magnaloy Weld Pad Kit.**

See next page for details.

magnaloy coupling company *501 Commerce Drive Alpena, MI 49707* ***989 356-2186***
A Division of Douville Johnston Corporation *Fax: 989 354-4190* *http://www.magnaloy.com*

Weld Pad Kit:

Features:

- Allows simple bolt down installation and design flexibility with drilling and tapping the reservoir surface.
- Eliminates the possibility of heat damage to rubber vulcanization caused by welding directly on the dampening bar.
- Available in sizes to accommodate all Magnaloy Motor Dampening Bars.
- Provides additional motor height to give added design flexibility and plumbing options.
- Supplied in sets of four (4) pads per kit (one set for each motor).

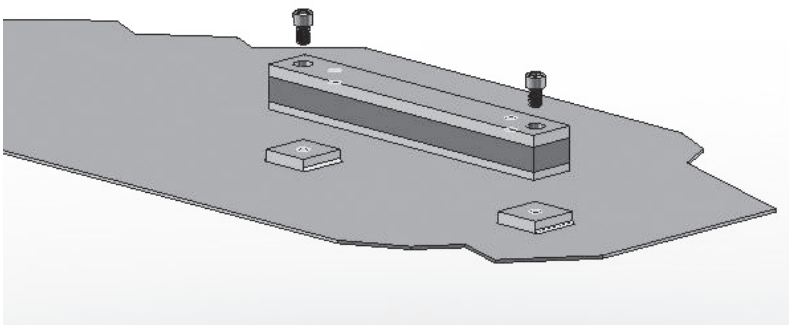

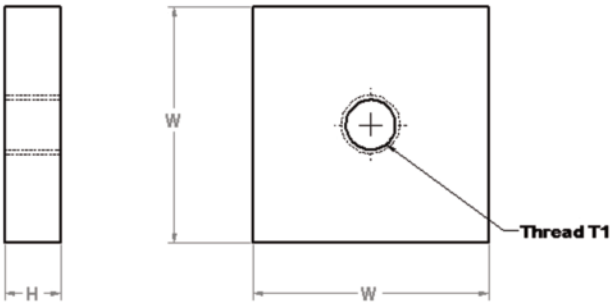

Part Number	Fits Motor Frames	Weld Pad Dimensions (inches)		
		W	H	T1
MWP056-256	056C thru 256TC	2.0	.50	1/2-13 UNC
MWP284-286	284TC/TSC thru 286TC/TSC	2.75	.50	5/8-11 UNC
MWP324-365	324TC/TSC thru 365TC/TSC	2.75	.75	3/4-10 UNC
MWP404-405	404TC/TSC thru 405TC/TSC	4.0	.75	3/4-10 UNC
MWP444-445	444TC/TSC thru 445TC/TSC	4.75	.75	1-8 UNC

Motor Base Plate:

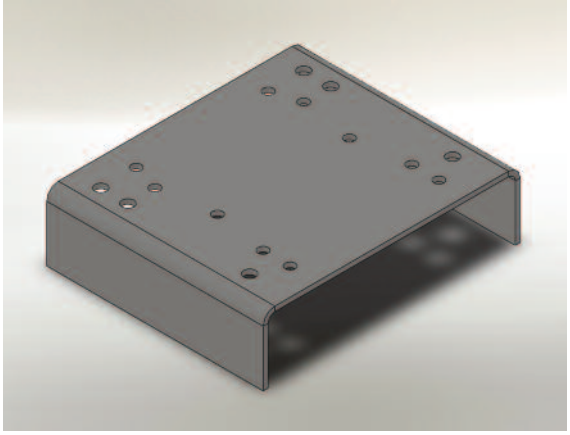

Features:

- Simplifies motor mounting to Reservoir top by eliminates drilling and threading on Reservoir.
- Base Plate welds directly on the Reservoir top or Porch on "L" Tanks
- Available in sizes to accommodate NEMA 056C through 326TC/TSC frame sizes.
- Provides additional motor height to give added design flexibility and plumbing options.
- Each size accomodates several NEMA frame sizes.
- Made from heavy gauge (7ga on 056 size and 1/4" on 213 thru 326 sizes) sheet steel to provide strength and rigidity.

MBP-056/184 - Fits NEMA frame motors 056C thru 184TC

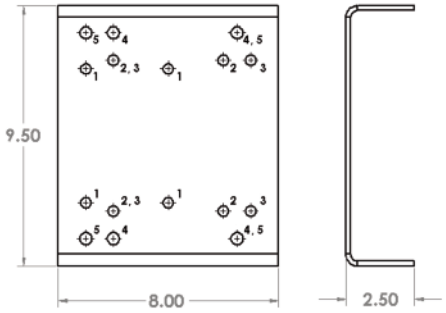

Feature Number	Motor Frame	Hole Diameter	Number of Holes
1	056C	0.375	4
2	143TC	0.375	4
3	145TC	0.375	4
4	182TC	0.437	4
5	184TC	0.437	4

MBP-213/256 - Fits NEMA frame motors 213TC thru 256TC

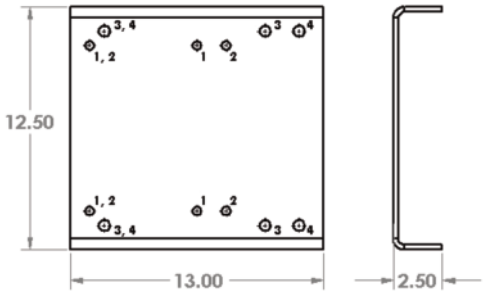

Feature Number	Motor Frame	Hole Diameter	Number of Holes
1	213TC	0.437	4
2	215TC	0.437	4
3	254TC	0.562	4
4	256TC	0.562	4

MBP-284/326 - Fits NEMA frame motors 284TC/TSC thru 326TC/TSC

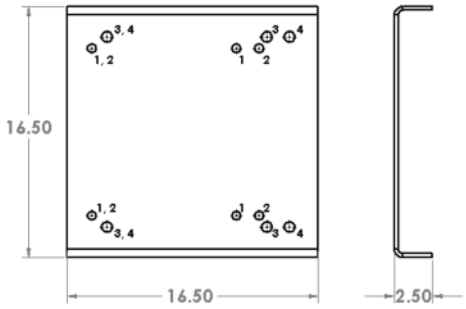

Feature Number	Motor Frame	Hole Diameter	Number of Holes
1	284TC/TSC	0.437	4
2	286TC/TSC	0.437	4
3	324TC/TSC	0.562	4
4	326TC/TSC	0.562	4

magnaloy coupling company *501 Commerce Drive Alpena, MI 49707* ***989 356-2186***
A Division of Douville Johnston Corporation *Fax: 989 354-4190* *http://www.magnaloy.com*

Gauge Isolators

A High Quality, Push-to-Read Device that Isolates and Protects your Gauge. You can Read up to Six Port Signals from a Single Gauge.

Magnaloy Gauge Isolators are manufactured from high quality steel hexagonal bar stock and machined to exact tolerances. Pressure is supplied to the gauge only when requested, by pushing the knob. This prevents gauge failure caused by continuous exposure of the gauge to damaging pressure surges and helps extend the life of the gauge and maintain its accuracy. This design provides simple mounting options and an attractive, compact package.

Single Position Gauge Isolator Specifications:

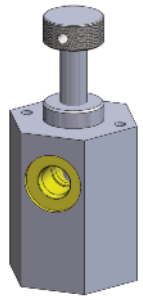

- Push to read.
- Operating Temperature -30^0 F to 240^0 F.
- 5,000 PSI working pressure.
- Viton Seals.
- 1/4" NPT or #4 SAE O-Ring ports.
- Panel or in-line mounting (maximum panel thickness - 5/16")

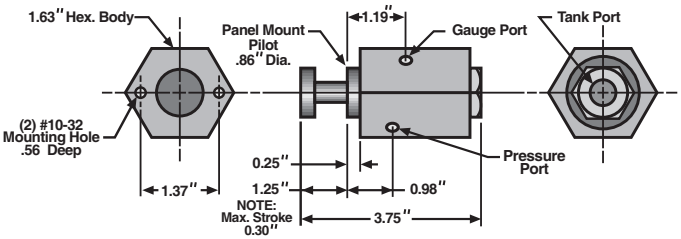

Six Position Gauge Isolator Specifications:

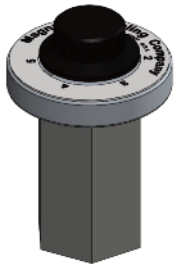

- Turn to select position, push to read.
- Operating Temperature -30^0 F to 240^0 F.
- 5,000 PSI working pressure.
- Viton Seals.
- #4 SAE O-Ring ports.
- Panel mounting.
- Read up to 6 pressure signals from a single gauge.

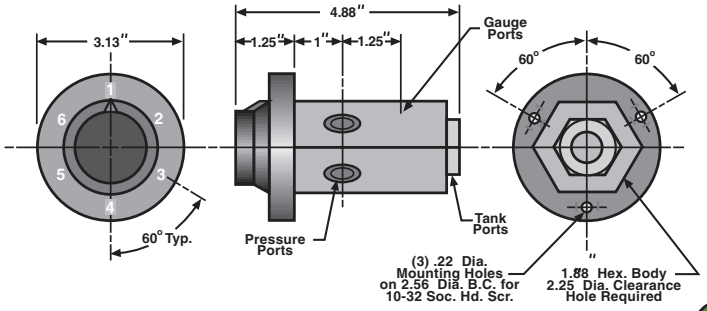

5

Ordering Specifications:

Part Number	Positions	Port Type
GI-01-SAE	Single	#4 SAE O-Ring
GI-01-NPT	Single	1/4" NPT
GI-06-SAE	Six	#4 SAE O-Ring

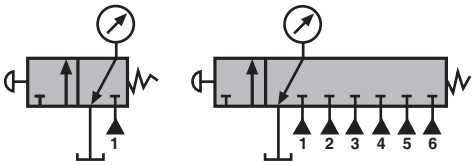

A Dependable Pressure-Sensing Device that Converts a set Hydraulic Pressure to an electrical Signal - up to THREE Signals in a Single Switch.

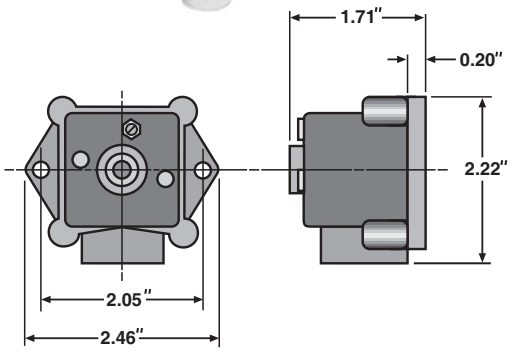

Technical Specifications

Operating Characteristics:

- Adjustable Range: 300 PSI to 2,600 PSI
- Pressure Reset: 125 PSI to 300 PSI, nominal
- Rated Pressure 4,000 PSI
- Burst Pressure: 12,000 PSI
- Temperature Rating: -20^0 F to 160^0 F
- Repeatability: 2% of set pressure

Electrical Characteristics:

- U.L. Listed Switching Elements
- Rating: 4 amps, 250 VAC / 3 amps, 12 VDC

Options:

- Second and Third Independently adjustable switches
- Factory pre-set to specified pressures
- 200 PSI to 1,250 PSI range (L) (125 PSI to 200 PSI reset)
- 500 PSI to 4,000 PSI range (H), High cycle unit (300 PSI to 450 PSI reset)

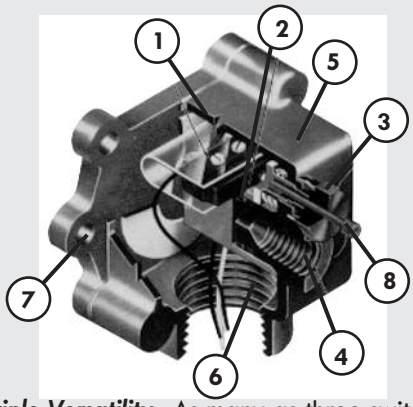

1. ***Triple Versatility.*** As many as three switching elements can be independently adjusted over the full PS-400 pressure range.
2. ***Fluid Compatibility.*** Viton seal with Teflon back-up ring compatible with most hydraulic fluids.
3. ***Easy Pressure Adjustment.*** External adjustment nut is easily accessible for quick pressure reset.
4. ***Save Plumbing Cost.*** Single pressure tap (1/8" NPT female) serves all three piston mounted microswitches.
5. ***Oil Tight Case (NEMA 12)***
6. ***Standard Conduit Connection.*** 1/2" NPT female.
7. ***Easy Installation.*** Two mounting holes provided for No. 10 screws.
8. ***Positive Locking.*** Pressure Adjusting Screw.

Pressure Switch Wiring Instructions:

	Switch #1	Switch #2	Switch #3
Normally Open	Red	Red w/1 Yellow Stripe	Red w/2 Yellow Stripes
Common	White	White w/1 Yellow Stripe	White w/2 Yellow Stripes
Normally Closed	Black	Black w/1 Yellow Stripe	Black w/2 Yellow Stripes

Pressure Switch is tested but NOT pre-set.
NOTE: factory will pre-set pressure for a nominal charge
Important! Lock nut torque range: 6 - 8 in lbs.

How to order:

- PS-400-115 Single Switch Assembly
  NEMA 12 Enclosure, Viton Seals, 300 - 2,600 PSI Range.
- PS-400-215 Double Switch Assembly
  NEMA 12 Enclosure, Viton Seals, 300 - 2,600 PSI Range.
- PS-400-315 Triple Switch Assembly
  NEMA 12 Enclosure, Viton Seals, 300 - 2,600 PSI Range.

To specify pre-set pressure(s), note setting(s) after part number.
For optional operating ranges specify (L) or (H) after part number.

magnaloy coupling company *501 Commerce Drive Alpena, MI 49707* ***989 356-2186***
A Division of Douville Johnston Corporation *Fax: 989 354-4190* *http://www.magnaloy.com*

A Cost Saving, Easy to Identify, Inventory of Commonly used Buna-N or Viton O-Rings. Sized for Vickers Industrial Valves.

How to Order:

ORK-12000 Buna-N O-Ring Kit

ORK-12001 Vitron O-Ring Kit

Each kit contains the following size and quantities of either Buna-N or Viton O-Rings:

Plug Number	Quantity	Buna-N Vicker's Part No.	Viton Vicker's Part No.
1	34	154000	262326
2	34	154001	262327
3	34	154002	262328
4	32	154004	262330
5	32	154005	262331
6	32	154006	262332
7	18	154139	262333
8	36	199811	262334
9	18	173792	262335
10	18	153950	262336
11	18	154942	262337
12	18	157515	262338
13	18	154142	262339
14	18	166360	262340
15	18	174619	262341
16	18	153999	262920
17	18	187000	262344
18	17	154137	262348
19	13	154012	262354
20	13	154130	262498

Plug Number	Quantity	Buna-N Vicker's Part No.	Viton Vicker's Part No.
21	13	199812	262356
22	12	199813	262361
23	12	157143	261818
24	12	199817	262369
25	9	154014	262389
26	9	154015	262390
27	9	154016	262391
28	9	154017	262392
29	9	154018	262393
30	18	154019	262394
31	9	154020	262395
32	9	154023	262398
33	9	154024	262399
34	9	154026	262401
35	16	154077	262402
36	8	154078	262403
37	8	154079	262404
38	8	154084	262409
39	17	154128	262496
40	15	154129	262497

SECTION 6

MAGNALOY ROD END ALIGNMENTCOUPLERS

NOTE: *Due to Magnaloy's policy of continuous improvement, specificaitons are subject to change without notice. Check with the factory or our Web Site at www.magnaloy.com for the latest information.*

magnaloy coupling company *501 Commerce Drive Alpena, MI 49707* ***989 356-2186***
A Division of Douville Johnston Corporation *Fax: 989 354-4190* *http://www.magnaloy.com*

Time and Money Saving Features...

- Eliminates need for custom designing.
- Simplifies cylinder installation.
- Increases design tolerances.
- Cuts cylinder repairs.
- Increases cylinder life - easier on seals, wiper, bearing surfaces and cushion parts.
- Compensates for mchinery deflection and cuts bearing wear from side loads and binding.
- Allows equally effective angular or lateral displacement in either direction, push or pull.
- Immediated delivery from stock on thread sizes thru 1 1/2".

- Total of 10^0 Spherical Movement in push or pull.
- Total of 1/8" Lateral Movement.
- Manufactured from high tensile and hardened materials.
- Lubricated at factory.

- Adjusted at factory, no clearance of end play.
- Same load rating push or pull.
- Internal thread mates with standard style No. 2 cylinder piston rods; external with style No. 3.

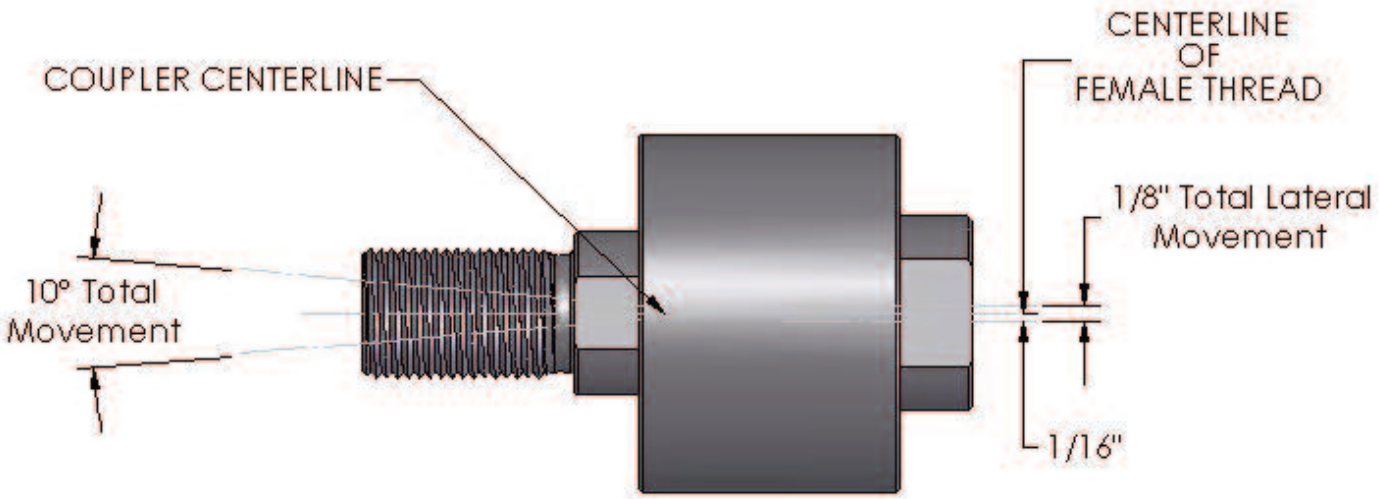

magnaloy coupling company 501 Commerce Drive Alpena, MI 49707 989 356-2186
A Division of Douville Johnston Corporation Fax: 989 354-4190 http://www.magnaloy.com

M - Series

PART NO.	A THREAD SIZE	B	C *	D	E	F	G	H	J *	K	MAX. RATED LOAD	PULL AT YEILD	APROX. WEIGHT (LBS.)
M010-01024 M010-01224	5/16-24 3/8-24	1.562	1.750	0.750	0.500	0.625	0.500	0.625	0.375	1.031	1,450 2,425	8,800 9,700	0.5
M015-01420 M015-01620	7/16-20 1/2-20	1.562	2.000	0.750	0.750	0.625	0.500	0.625	0.500	1.031	3,250 4,450	13,000 17,800	0.6
M020-02018 M020-02416 M020-02814	5/8-18 3/4-16 7/8-14	2.125	2.312	1.250	1.125	1.000	0.875	1.125	0.531	1.312	7,150 9,050 14,450	28,600 36,200 57,800	1.4
M030-10014	1-14	2.750	3.062	1.500	1.625	1.250	1.125	1.250	0.562	2.000	19,425	77,700	3.3
M040-10812	1-1/4-12	3.500	4.000	2.000	2.000	1.500	1.250	1.687	0.750	2.500	30,825	123,300	6.9
M050-11612 M050-12412	1-1/2-12 1-3/4-12	4.000	4.375	2.250	2.250	1.750	1.500	1.937	0.875	2.750	45,750 58,350	183,000 233,400	9.8
M060-12812 M060-20012	1-7/8-12 2-12	5.000	5.625	3.000	3.000	2.250	1.937	2.625	1.375	3.375	67,550 77,450	270,200 309,800	19.8
M070-20812	2-1/4-12	6.750	6.375	3.250	3.500	2.750	2.375	2.875	1.625	3.750	99,250	397,000	35.3
M080-21612 M080-22412 M080-30012	2-1/2-12 2-3/4-12 3-12	7.000	6.500	4.000	3.500	3.250	2.875	3.375 3.375 3.500	1.625	3.875	123,750 150,950 180,850	495,000 603,800 723,400	45.3
M100-30812	3-1/4-12	9.250	8.500	5.250	4.500	4.000	3.375	4.500	2.000	5.500	213,450	853,800	- - -
M140-40812	4 1/4-12	12.875	11.250	7.750	4.500	5.500	4.875	7.000	1.500	8.750	370,850	1,483,400	- - -

* *Tolerance +/- .030 inch, all other dimensions +/- .015 inch*

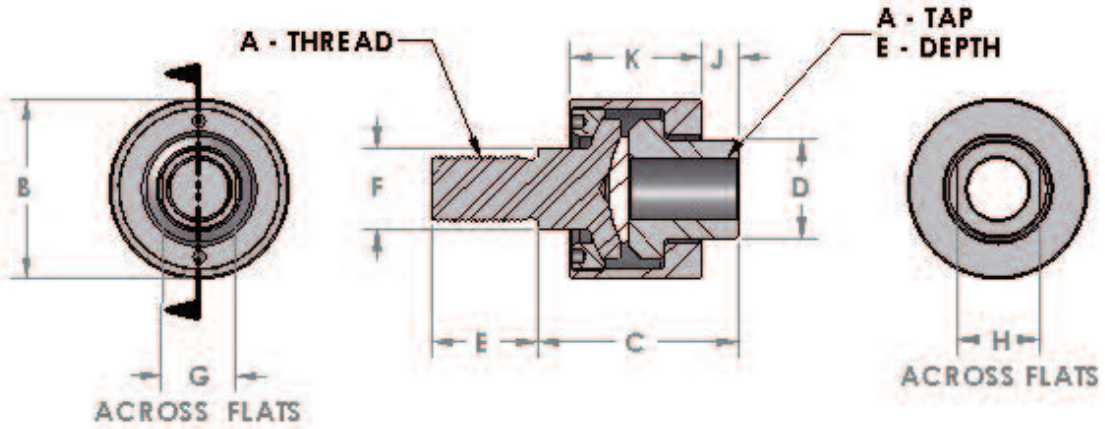

M - Series

magnaloy coupling company 501 Commerce Drive Alpena, MI 49707 989 356-2186
A Division of Douville Johnston Corporation Fax: 989 354-4190 http://www.magnaloy.com

- Lubricated at factory.
- Adjusted at factory, no clearance or end play.
- Same load rating - push or pull.
- Internal thread mates with standard style No. 2 cylinder piston rods; external thread with style No. 3.
- Total of 7 1/2^0 Shperical Movement and 1/8" Lateral movement capabilities.
- Designed to retro-fit with competitive brands while offering increased strength and misalignment capabilities.
- Manufactured from high tensile and hardened materials for additional strength and dependability.

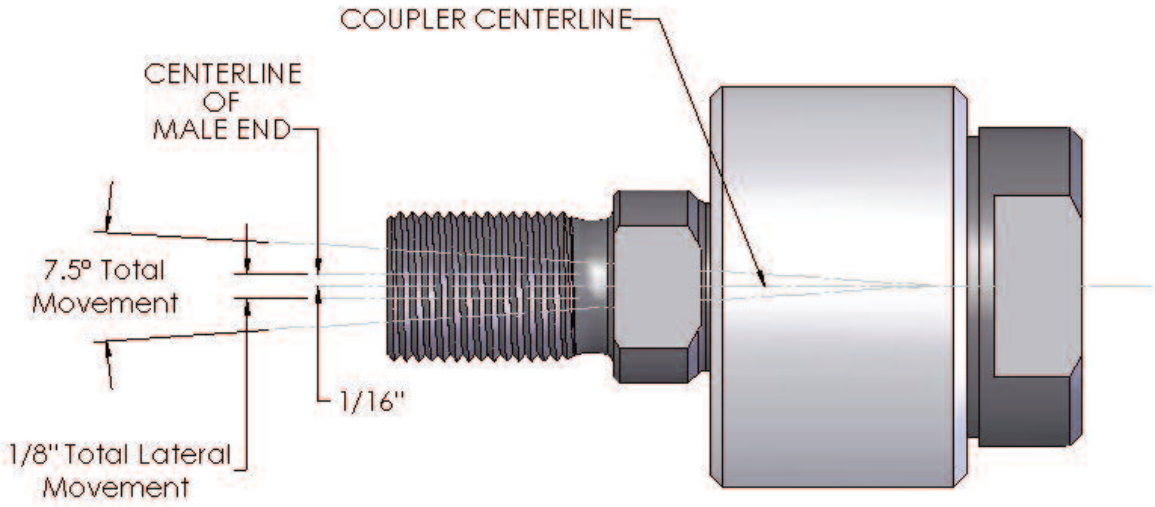

magnaloy coupling company 501 Commerce Drive Alpena, MI 49707 989 356-2186
A Division of Douville Johnston Corporation Fax: 989 354-4190 http://www.magnaloy.com

R - Series

PART NO.	A THREAD SIZE	B	C *	D	E	F	G	H	J *	K	MAX. RATED LOAD	APROX. WEIGHT (LBS.)
R010-01024 **R010-01224**	5/16-24 3/8-24	1.115	1.770	0.920	0.500	0.500	0.375	0.750	0.460	0.930	1,450 2,425	0.35
R020-01420 **R020-01620** **R020-02018**	7/16-20 1/2-20 5/8-18	1.365	1.988	1.115	0.750	0.625	0.500	0.875	0.440	1.088	3,250 4,450 6,800	0.55
R030-02416 **R030-02814**	3/4-16 7/8-14	1.990	2.340	1.600	1.125	0.969	0.750	1.313	0.600	1.282	9,050 14,450	1.4
R040-10014 **R040-10812**	1-14 1-1/4-12	3.115	2.964	2.360	1.625	1.450	1.250	1.875	0.743	1.794	19,425 30,825	4.8

* *Tolerance +/- .030 inch, all other dimensions +/- .015 inch*

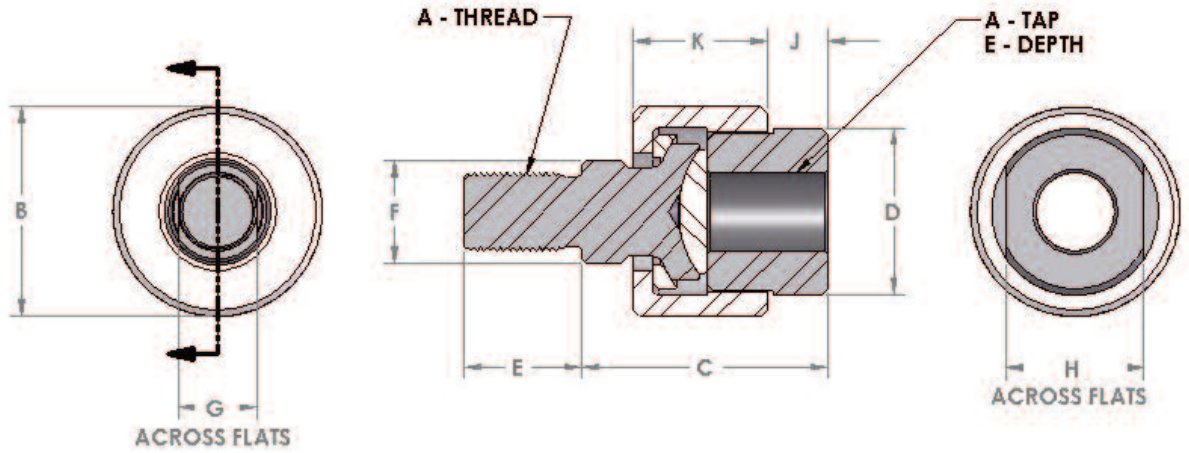

R - Series

magnaloy coupling company *501 Commerce Drive Alpena, MI 49707* ***989 356-2186***
A Division of Douville Johnston Corporation *Fax: 989 354-4190* *http://www.magnaloy.com*

SECTION R

REFERENCE SECTION

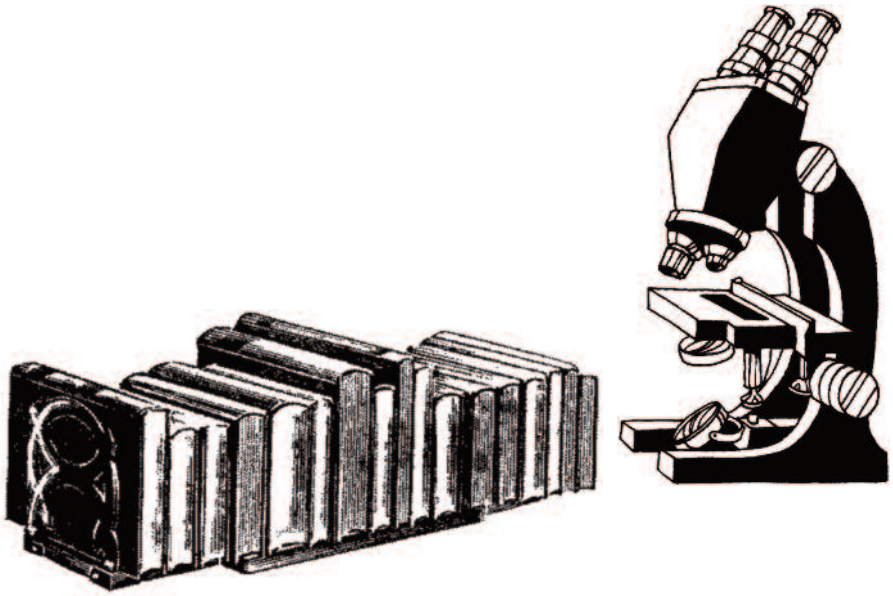

NOTE: *Due to Magnaloy's policy of continuous improvement, specificaitons are subject to change without notice. Check with the factory or our Web Site at www.magnaloy.com for the latest information.*

The following pages contain several reference items for use with the various Magnaloy Products. To assist in the use of these pages, the top menu bar indicates the product line most likely to be on interest with the page. Additional information on Magnaloy products can be found on our web site at www.magnaloy .com. This resource would contain the most recent information available.

Reference Pages Table of Contents

Standard SAE and Metric Pump Mounting Dimensions 171
NEMA Motor Frame Dimensions 172
Bar Manifold Isolation Plugs 173
Bar Manifold Flange and Bracket Mounting Kits 174
Cartridge Relief Valve Cross Reference Table 175
Cartridge Relief Valve Equivalents for D03 Original Design and Series Bar Manifolds . . 176
Cartridge Relief Valve Cavity Dimensions 177
Manufacturers Cross Reference for Gasket Mounted Valves 179
Standard Valve Interface Pattern Dimensions 180
Information to know about Filler Breathers and Filters 182
Manufacturers Cross Reference for Channel Mounted Cushion Clamps 183
Manufacturers Cross Reference for Modular Cushion Clamps 184
Differential Pressure Indicator Selection Guide 185
Filter Effiency Information 186
Filter Selection Data and Applicaiton Guidelines 187

magnaloy coupling company *501 Commerce Drive Alpena, MI 49707* ***989 356-2186***
A Division of Douville Johnston Corporation *Fax: 989 354-4190* *http://www.magnaloy.com*

TABLE 2 - SAE - 2 Bolt Mount

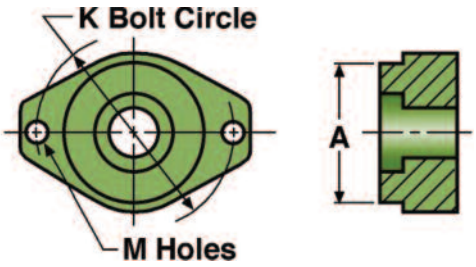

	A	K	M
SAE AA	2.000	3.250	0.406
SAE A	3.250	4.187	0.438
SAE B	4.000	5.750	0.562
SAE C	5.000	7.125	0.688
SAE D	6.000	9.000	0.812
SAE E	6.500	12.500	1.062
SAE F	7.000	13.781	1.062
Mounting Flange	Pilot Dia.	Flange Dimensions	

TABLE 3 - SAE - 4 Bolt Mount

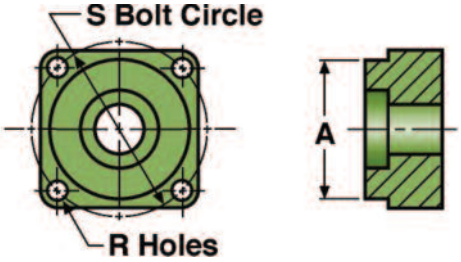

	A	S	R
USA4F17	1.781	2.838	0.375
SAE A	3.250	4.125	0.438
SAE B	4.000	5.000	0.562
SAE C	5.000	6.375	0.562
SAE D	6.000	9.000	0.812
SAE E	6.500	12.500	0.812
SAE F	7.000	13.781	1.062
Mounting Flange	Pilot Dia.	Flange Dimensions	

TABLE 4 - Metric Oval Mount (2 Bolt)

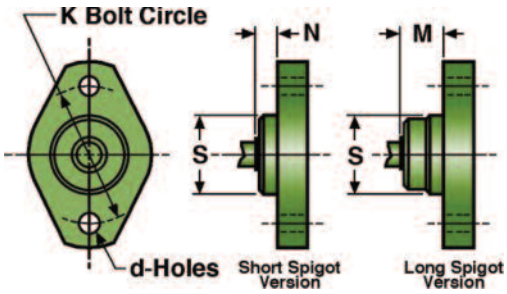

(All dimensions in mm)

	s	K	d	N	M
32 A2	32	56	6.6	8	16
40 A2	40	63	6.6	8	16
50 A2	50	80	9	8	20
63 A2	63	100	9	8	20
80 A2	80	109	11	8	20
100 A2	100	140	14	10	25
112 A2	112	160	14	10	25
125 A2	125	180	18	10	32
140 A2	140	200	18	10	32
160 A2	160	224	22	10	40
180 A2	180	250	22	10	40
200 A2	200	280	26	10	50
Mounting Flange	Pilot Dia.	Flange Dimensions			

TABLE 5 - Metric Square Mount (4 Bolt)

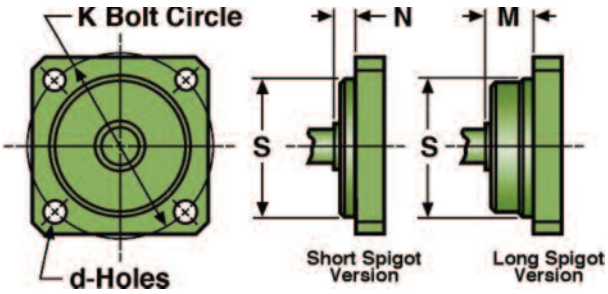

(All dimensions in mm)

	s	K	d	N	M
63 B4	63	85	9	8	20
63 S4	63	80	M8	8	20
80 B4	80	103	9	8	20
80 S4	80	100	9	8	20
100 B4	100	125	11	10	25
112 B4	112	140	11	10	25
125 B4	125	160	14	10	32
140 B4	140	180	14	10	32
160 B4	160	200	18	10	40
180 B4	180	224	18	10	40
200 B4	200	250	22	10	50
224 B4	224	280	22	10	50
250 B4	250	315	26	10	50
Mounting Flange	Pilot Dia.	Flange Dimensions			

TABLE 6 - NEMA 'C' Face Motor Dimensions

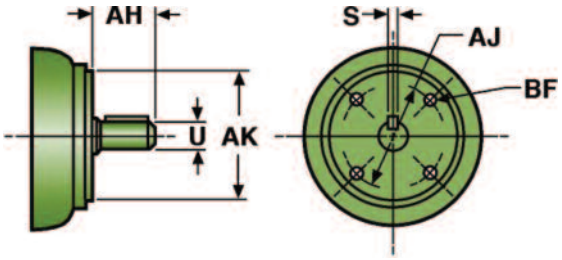

U-Frame Dimensions

	182UC 184UC	213UC 215UC	254UC 256UC	284UC 286UC	324USC 326USC	324UC 326UC	364USC 365USC	364UC 365UC	404USC 405USC	404UC 405UC	444USC 445USC	444UC 445UC
AH	2.125	2.75	3.50	4.625	3.00	5.375	3.50	6.125	4.00	6.875	4.00	8.375
U	7/8	1 1/8	1 3/8	1 5/8	1 5/8	1 7/8	1 7/8	2 1/8	2 1/8	2 3/8	2 1/8	2 7/8
S	3/16	1/4	5/16	3/8	3/8	1/2	1/2	1/2	1/2	5/8	1/2	3/4
AK	4.50	8.50	8.50	10.50	12.50	12.50	12.50	12.50	12.50	12.50	16.00	16.00
AJ	5.875	7.25	7.25	9.00	11.00	11.00	11.00	11.00	11.00	11.00	14.00	14.00
BF	3/8-16	1/2-13	1/2-13	1/2-13	5/8-11	5/8-11	5/8-11	5/8-11	5/8-11	5/8-11	5/8-11	5/8-11
HP*	1 2	3 5	7.5 10	15 20	25 30	25 30	40 50	40 35	60 75	60 75	125 150	125 150

T-Frame Dimensions

	056C	143TC 145TC	182TC 184TC	213TC 215TC	254TC 256TC	284TSC 286TSC	284TC 286TC	324TSC 326TSC	324TC 326TC	364TSC 365TSC	364TC 365TC	404TSC 405TSC	404TC 405TC	444TSC 449TSC	444TC 449TC
AH	2.062	2.125	2.625	3.125	3.75	3.00	4.375	3.50	5.00	3.50	5.625	4.00	7.00	4.50	8.25
U	5/8	7/8	1 1/8	1 3/8	1 5/8	1 5/8	1 7/8	1 7/8	2 1/8	1 7/8	2 3/8	2 1/8	2 7/8	2 3/8	3 3/8
S	3/16	3/16	1/4	5/16	3/8	3/8	1/2	1/2	1/2	1/2	5/8	1/2	3/4	5/8	7/8
AK	4.50	4.50	8.50	8.50	8.50	10.50	10.50	12.50	12.50	12.50	12.50	12.50	12.50	16.00	16.00
AJ	5.875	5.875	7.25	7.25	7.25	9.00	9.00	11.00	11.00	11.00	11.00	11.00	11.00	14.00	14.00
BF	3/8-16	3/8-16	1/2-13	1/2-13	1/2-13	1/2-13	1/2-13	5/8-11	5/8-11	5/8-11	5/8-11	5/8-11	5/8-11	5/8-11	5/8-11
HP*	1/4 1/2	1 2	3 5	7.5 10	15 20	25 30	25 30	40 50	40 50	60 75	60 75	100 125	100 125	150 200	150 200

** Horse Power at 1750 RPM*

R

magnaloy coupling company *501 Commerce Drive Alpena, MI 49707* ***989 356-2186***
A Division of Douville Johnston Corporation *Fax: 989 354-4190* *http://www.magnaloy.com*

Isolation Plug

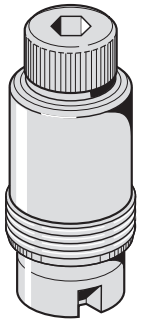

NOTE: See Bar Manifolds, pages 37 - 61 for Specific Magnaloy Standard Configurations with Options

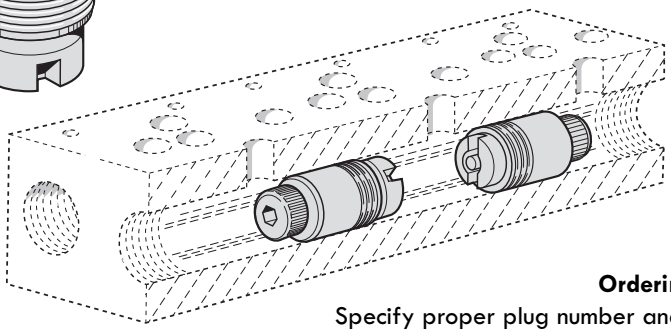

Features & Advantages

* Suitable for mild steel, ductile iron or aluminum manifolds
* Leak free
* Blocks pressure from both sides
* Permanent
* May be inserted to any depth in blind or thru holes
* **INSTALLED AT FACTORY BY MAGNALOY** or Field Installation by Customer **

Multiple plugs can be used to isolate pressure line or tank line flows to or from various valve stations.

Ordering Data

Specify proper plug number and location(s) required in manifold

Notes: **1** - Isolation Plug Location is specified by using the following codes after the "I" option designation:

Port	Location*
P - Pressure Port	A - Between Stations 1 & 2
T - Tank Port	B - Between Stations 2 & 3
	C - Between Stations 3 & 4
	D - Between Stations 4 & 5 (etc.)

Examples:
Option Code for Pressure Isolation between stations 3 & 4 = IPC
Option Code for Tank Isolation between stations 1 & 2 = ITA
Option Code for Pressure Isolation between stations 1 & 2 and Tank Isolation between stations 2 & 3 = IPATB
*Location is determined with A &B ports facing forward, valves up and numbering from left to right

Installation Instructions for Customer Installed Isolation Plugs

1. Make sure the correct plug is being used for the size of manifold and passage.
2. Insert the plug into the pressure or tank passage to proper depth between the valve stations being isolated.
3. Tighten the socket head cap screw to the specified torque setting while holding other end of plug using the screwdriver slot provided.
4. If more than one plug is being installed in a given passage, insert a screwdriver through a customer machined auxillary port or a pre-existing flow passage to secure the slotted end of the plug while tightening.

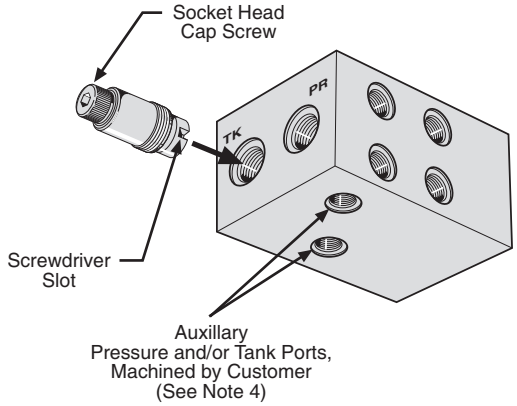

CAUTION: *Be sure the isolation plugs do not block the inlet or outlet port of the valve stations.*

**** Isolation Plugs for Customer Installation**

Aluminum Manifolds:

Customer must supply Magnaloy with I.D. dimension of passage to be isolated if ordering for previously supplied manifold.

Customer assumes all responsibility and liability resulting from isolation Plug installation.

Ductile/Steel Manifolds:

Recommend installation by Magnaloy.

NFPA MANIFOLD SIZE	SYSTEM PASSAGE	PLUG PART NUMBER FOR ALUMINUM MANIFOLDS		PLUG PART NUMBER FOR DUCTILE/STEEL MANIFOLDS
		MAGNALOY PART NO.	TORQUE SETTING*	MAGNALOY PART NO.
D03 SBM- _SP03	Pressure & Tank	**IP-AP03-0**	480 in lbs.	**IP-SP03-0**
D03 BM- _HP03	Pressure & Tank	**IP-AP03-1**	480 in lbs.	**IP-SP03-1**
D03 BMR- _SP03	Pressure & Tank	--	480 in lbs.	**IP-SP03-1**
D03 BMR- _H03	Pressure	--	960 in lbs.	**IP-SP05-0**
	Tank	--	1680 in lbs.	**IP-SP08-0**
D05 BM- _SP05	Pressure	**IP-AP05-0**	960 in lbs.	**IP-SP05-0**
	Tank	**IP-AT05-0**	1,200 in lbs.	**IP-ST05-0**
D05 BM- _HP05	Pressure	**IP-AP08-0**	1,680 in lbs.	**IP-SP08-0**
	Tank	**IP-AT05-1**	1,680 in lbs.	**IP-ST05-1**
D08 BM- _SP08	Pressure	**IP-AP08-0**	1,680 in lbs.	**IP-SP08-0**
	Tank	**IP-AT08-0**	1,680 in lbs.	**IP-ST08-0**
D08 BMR- _HP08	Pressure	--	1,680 in lbs.	**IP-ST08-0**
	Tank	--	--	--

Mounting Flange & Mounting Bracket Kits

D03 Bar Manifold Parallel & Series

Mounting Bracket Kit
BK-A03
(2 Brackets with Bolts)
Request Separately

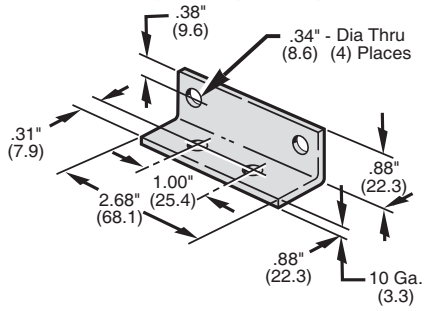

D03 Standard Flow Retro Design Manifold

Mounting Bracket Kit
BKR-A03
(2 Brackets with Bolts)

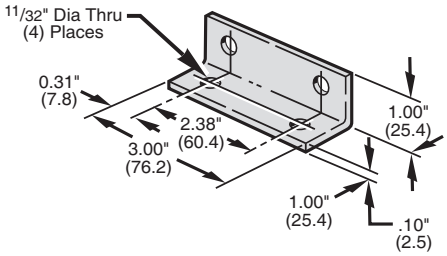

D03 High Flow Retro Design Manifold

Mounting Bracket Kit
BKR-AH03
(2 Brackets with Bolts)

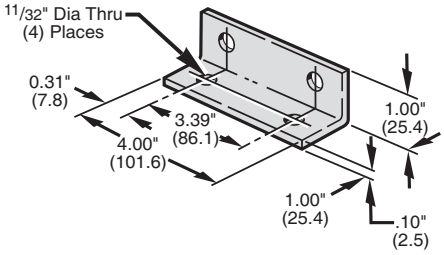

D03 Bar Manifold Parallel & Series

Mounting Flange Kit
FK-A03
(Includes Bolts)
Optional - Order Separately

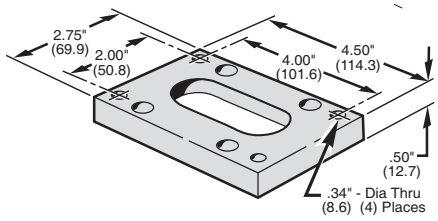

D05 Bar Manifold Parallel & Series

Mounting Bracket Kit
BK-A05
(2 Brackets with Bolts)
Request Separately

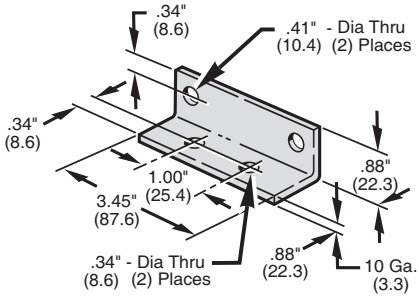

D05 Bar Manifold Parallel & Series

Mounting Flange Kit
FK-A05
(Includes Bolts)
Optional - Order Separately
For D05 Standard Flow Manifolds Only

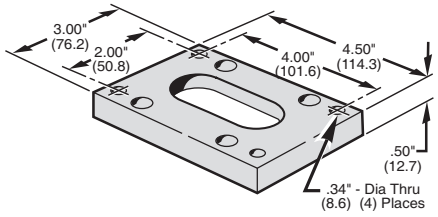

D08 Bar Manifold Parallel & Series

Mounting Bracket Kit
BK-A08
(2 Brackets with Bolts)
Request Separately

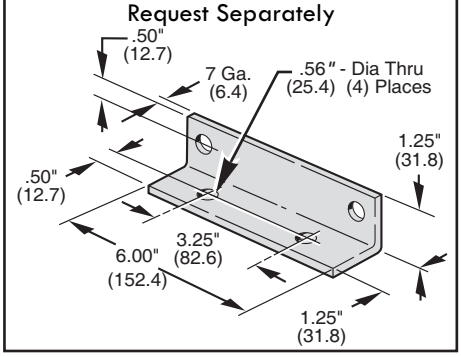

D08 High Flow Retro Design Manifold

Mounting Bracket Kit
BKR-A08
(2 Brackets with Bolts)

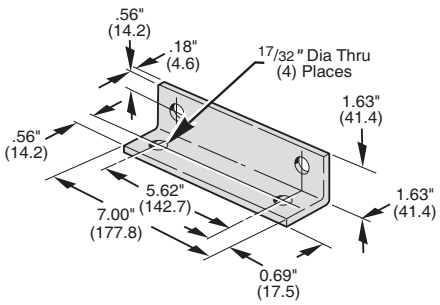

R

magnaloy coupling company 501 Commerce Drive Alpena, MI 49707 989 356-2186
A Division of Douville Johnston Corporation Fax: 989 354-4190 http://www.magnaloy.com

Usage: *All Current Bar Manifolds (Except D03 "SBM" and D03 Series) & Subplates w/C-10-2 Cavity (Pressure at Nose)*

Magnaloy Part Number	Mantech Part Number	Delta Power Part Number	Pressure Rating
RV-C10-2-02	S-10-1-2	DE-RVA-00-0200	50-200 PSI
RV-C10-2-15	S-10-1-15	DE-RVA-00-1500	50-1500 PSI
RV-C10-2-30	S-10-1-30	DE-RVA-00-3000	1500-3000 PSI

Usage: *Current D03 Series and D03 Original Design ("SBM") Bar Manifolds) (Reverse Flow Cartridge) C-10-2R Cavity (Pressure at Side)*

Magnaloy Part Number	Mantech Part Number	Delta Power Part Number	Pressure Rating
RV-C10-2R-02	S-10-2-2	8500-2124	50-200 PSI
RV-C10-2R-15	S-10-2-15	8500-2125	50-1500 PSI
RV-C10-2R-30	S-10-2-30	8500-2126	1500-3000 PSI

Usage: D05 Original Design *Bar Manifolds and All Current w/Sun T-3A Cavity (Pressure at Nose)*

Magnaloy Part Number	Mantech Part Number	Delta Power Part Number	Pressure Rating
RV-T3A-08	S-10-3-8	RPGCJDV	25-800 PSI
RV-T3A-15	S-10-3-15	RPGCJBV	50-1500 PSI
RV-T3A-30	S-10-3-30	RPGCJAV	100-3000 PSI

Usage: *All Current w/Sun T-10A Cavity (Pressure at Nose)*

Magnaloy Part Number	Mantech Part Number	Delta Power Part Number	Pressure Rating
RV-T10A-15	S-10-10-15	RPECJBV	50-1500 PSI
RV-T10A-30	S-10-10-30	RPECJAV	100-3000 PSI

Supplier	Part Number		Pressure Range
	Magnaloy	Mantech (Original Model)	
Magnaloy Coupling Co. (for D03 Series & Original Design (SBM) Manifolds)	RV-C10-2R-02	S-10-2-2	50-200 PSI
	RV-C10-2R-15	S-10-2-15	200-1500 PSI
	RV-C10-2R-30	S-10-2-30	1500-3000 PSI
Delta Power Hydraulics	DE-RVD-00-0200		50-200 PSI
	DE-RVD-00-1500		200-1500 PSI
	DE-RVD-00-3000		1500-3000 PSI

Valves requiring equivalent cavities to illustrations shown below may be substituted.

This is a Standard C10-2 Cavity except the valve has a reverse flow with SIDE INLET and NOSE OUTLET.

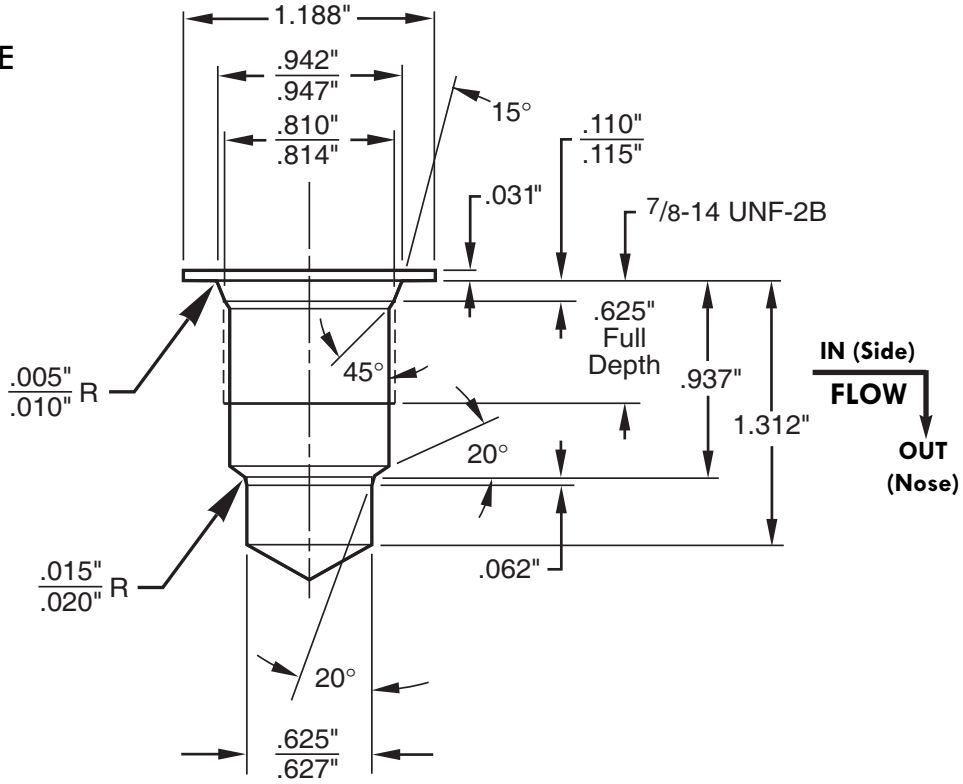

C-10-2 Cavity Detail

R

magnaloy coupling company 501 Commerce Drive Alpena, MI 49707 989 356-2186
A Division of Douville Johnston Corporation Fax: 989 354-4190 http://www.magnaloy.com

Common C-10-2

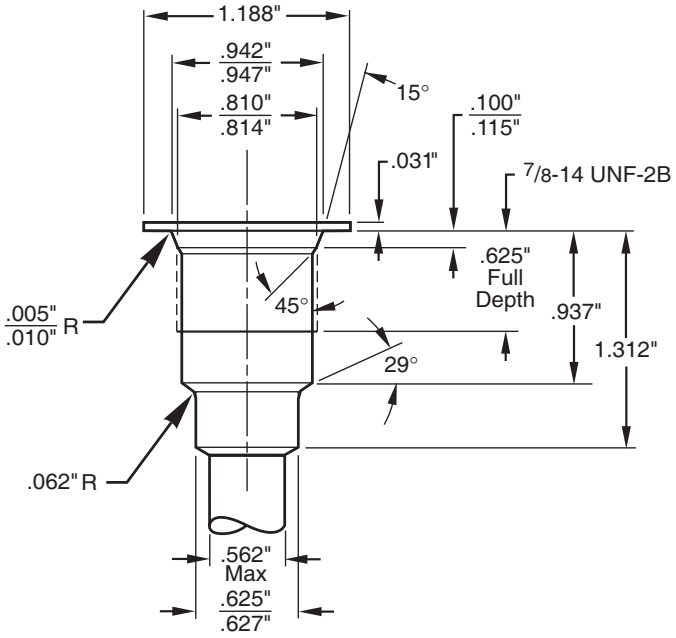

Common C-16-2

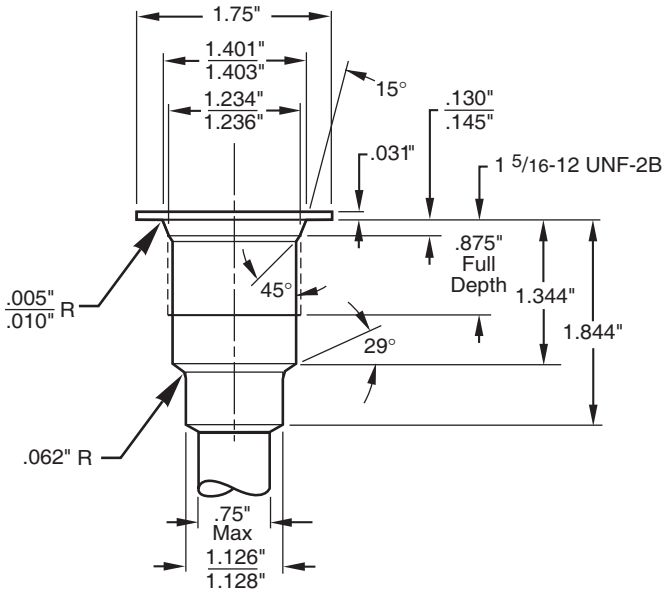

Sun T-10A

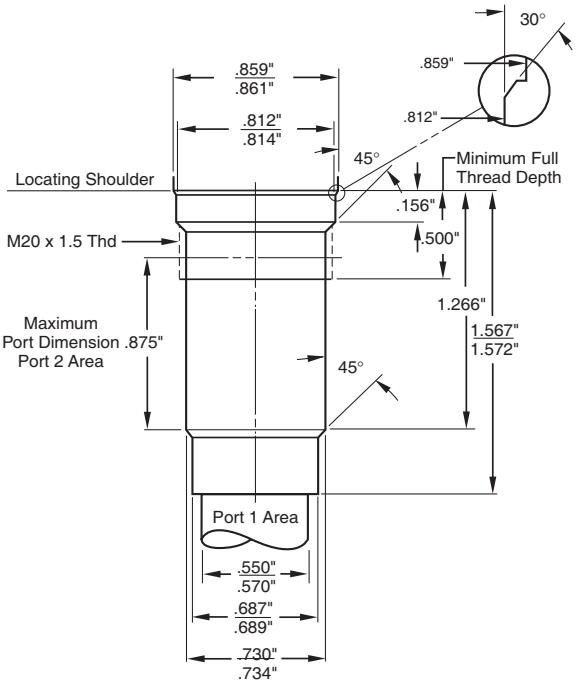

Sun T-3A

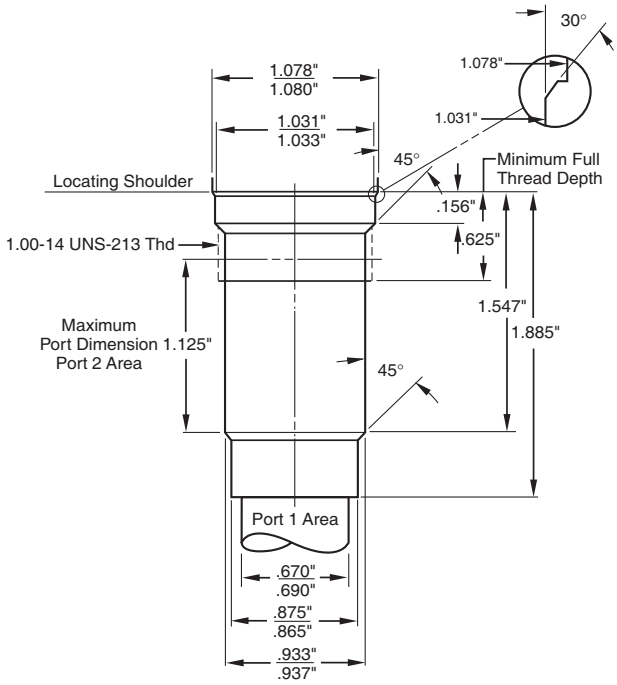

R

Sun T-16A

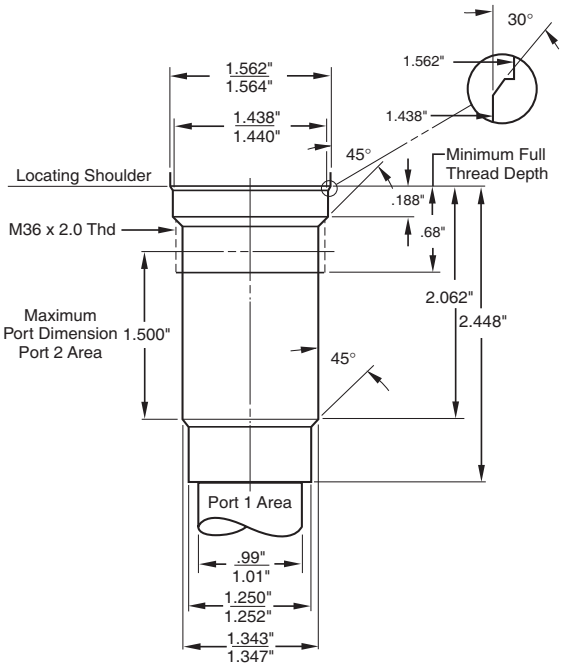

magnaloy coupling company 501 Commerce Drive Alpena, MI 49707 989 356-2186
A Division of Douville Johnston Corporation Fax: 989 354-4190 http://www.magnaloy.com

Valve Manufacturer	Directional Valve			Pressure Control & Pressures Reducing Valves		Flow Control Valves	
	NFPA DO3	NFPA DO5	NFPA DO8	NFPA P06	NFPA P10	NFPA F02	NFPA F03
Continental	V* 3M V* 5M	V* 12M	V* 35M			F12M	F30M
Double A	005	02	06	BPQ-06 WQP-06	QSA-185	QXA-02	QXA-03
Hartman	00	1/8"	3/4"	3/4"	1 1/2"		
Parker	2M	3/8"	3/4"	16	20	60	80
Racine		1/4"	3/4"	3/4"	1 1/4"	1/4"	3/8"
Rexroth	6	8 & 10	20 & 22	DZ-20 DR-20	DZ-30 DR-30	2FRMM10-1	2FRMM15-1
Rivett	01-61	02-41	68** 3/8-1			P-8622-02-41	
Vickers	DG4V	DG45401	DG55406	RCG-06 XG-06	RG-10	FG-02-1500	FG-03-1500

D03 Directional Valve Interface

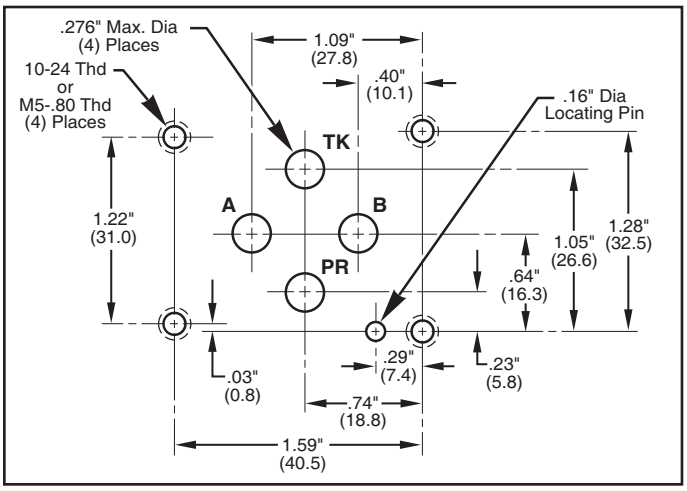

D05 Directional Valve Interface

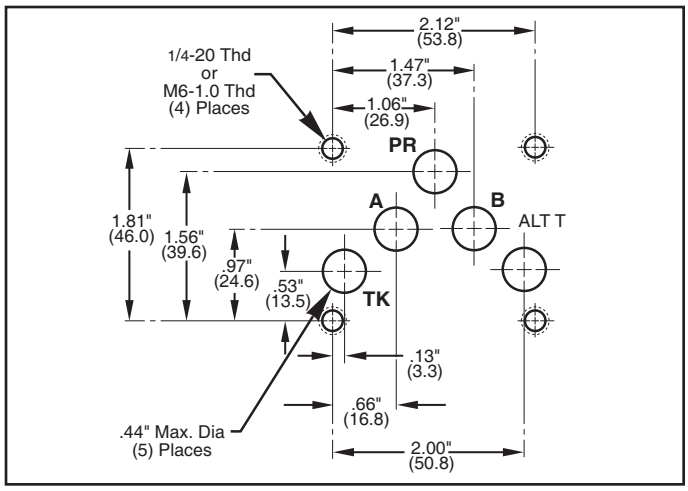

D05E Directional Valve Interface

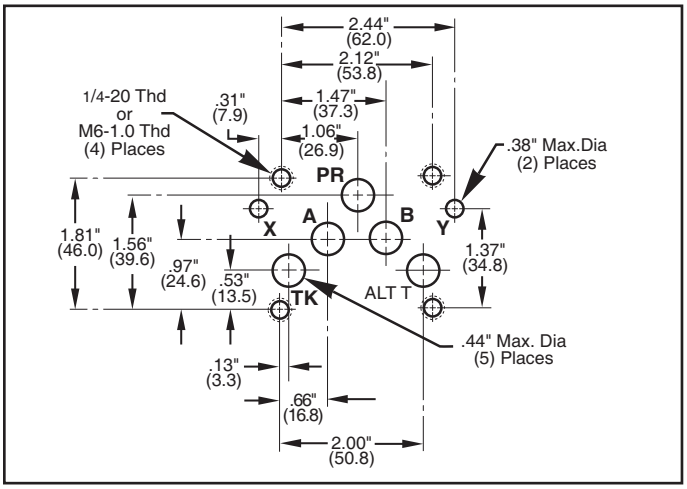

D05H Directional Valve Interface

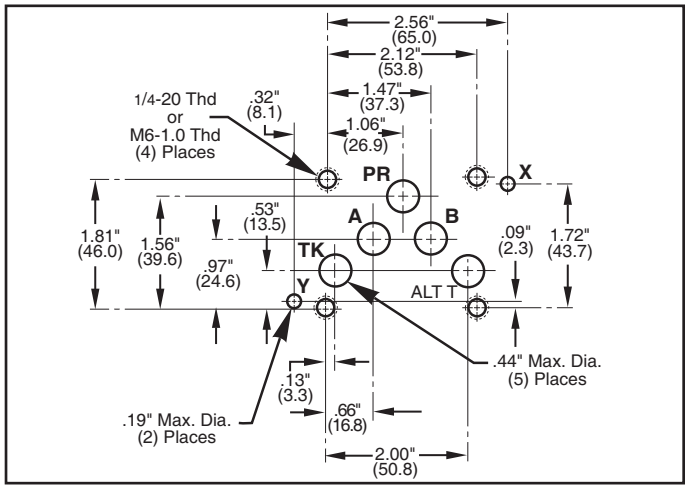

D07 Directional Valve Interface

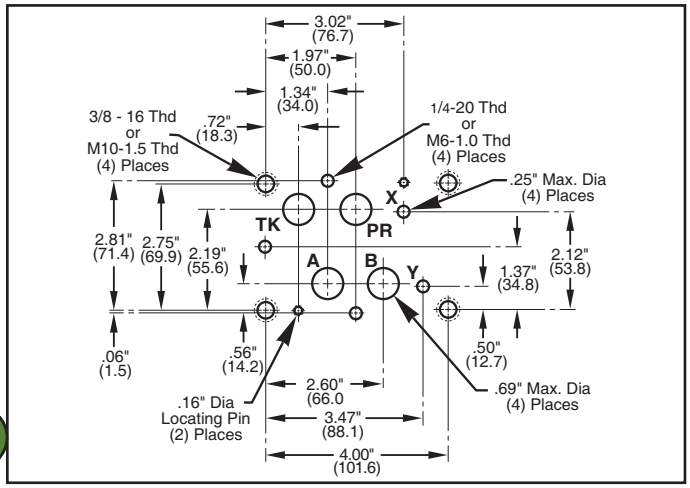

D08 Directional Valve Interface

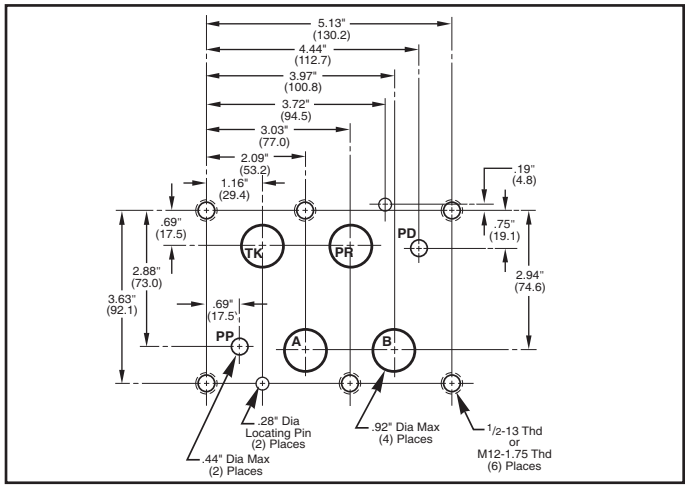

R

magnaloy coupling company *501 Commerce Drive Alpena, MI 49707* ***989 356-2186***
A Division of Douville Johnston Corporation *Fax: 989 354-4190* *http://www.magnaloy.com*

2F06 Flow Control Valve Interface

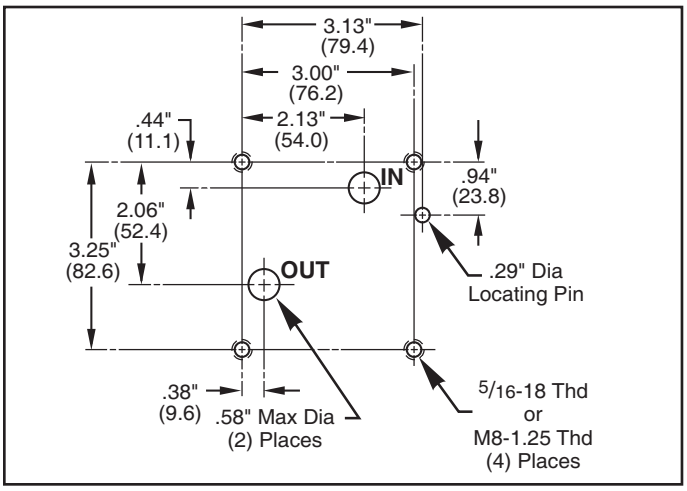

2F06 Flow Control Valve Interface

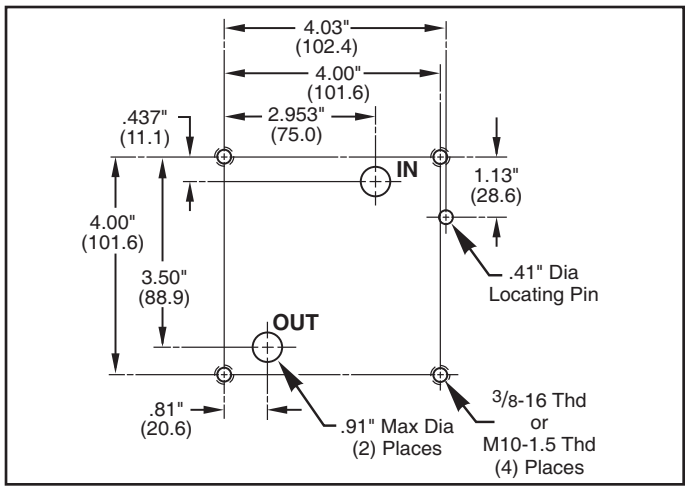

P06 Pressure Control Valve Interface

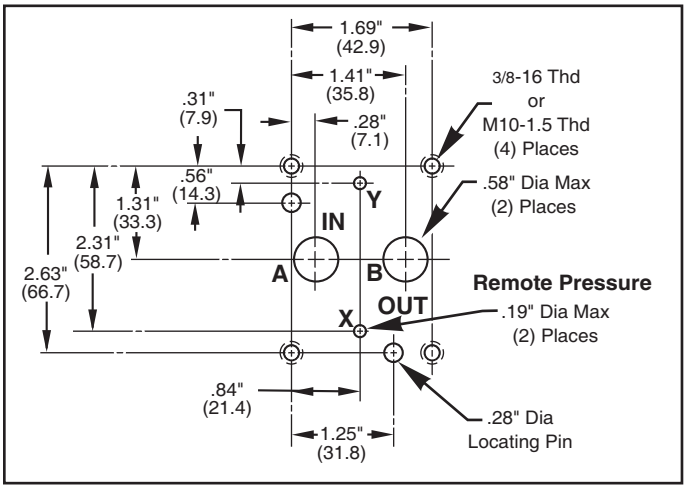

P08 Pressure Control Valve Interface

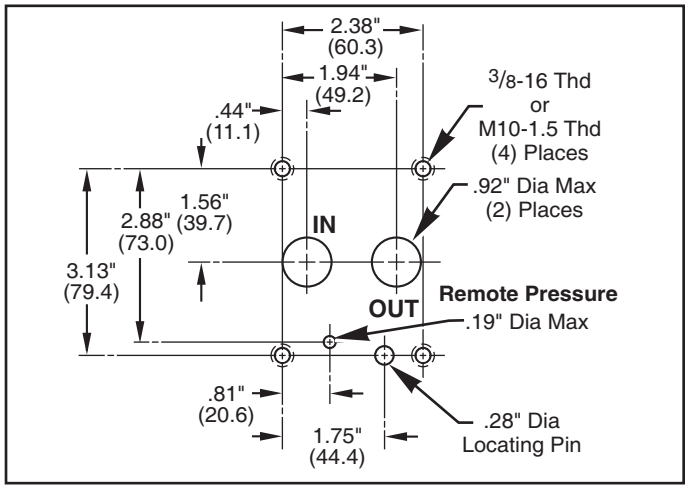

P10 Pressure Control Valve Interface

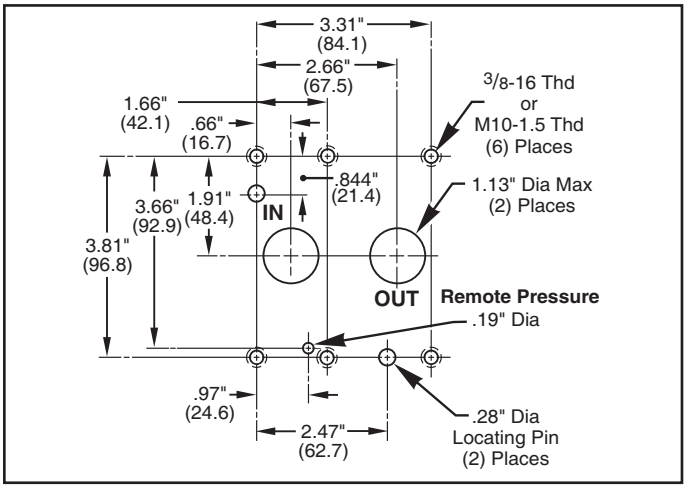

R08 Pilot Oper. Pres. Relief Valve Interface

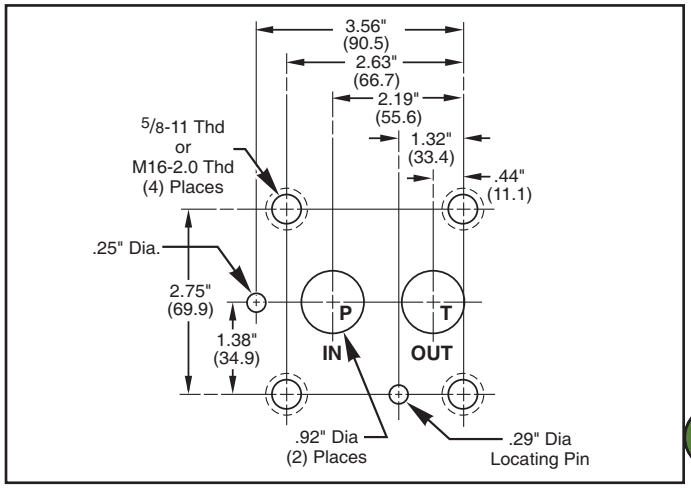

R

What you should know about Filler Breathers!

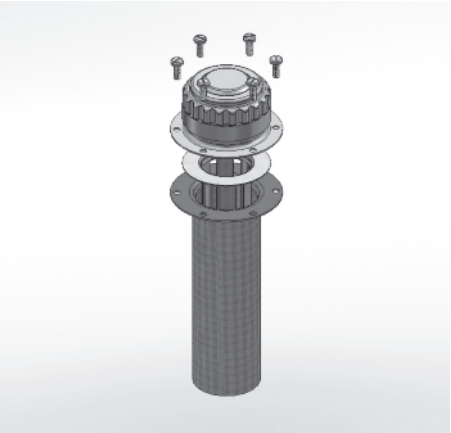

Sizing is based on the reservoir air exchange requirements, NOT the pump output. Magnaloy Filler Breather Assemblies are sized for a maximum pressure drop of .45 inches Hg.

Hydraulic users rarely change the breather filter, which can contribute to pump cavitation. A routine of regularly changing or cleaning the air filter should be developed. A vacuum indictor can be very helpful in determining the cleanliness of the air filter.

The Filler Breather filtration rating should be equal to or better than the system filtration rating.

On systems with constant fluid level in the reservoir, a pressurized Filler Breather Cap increases pump inlet pressure. Generally, the more pressure a pump has at its inlet, the quieter it will run.

The NPFA standard call for TWO filler openings, each of which should pass a minimum of 5 GPM. They should be located on opposite sides or ends of the reservoir.

The maximum air filtration allowed is 40 micron. All of Magnaloy's Filler Breather Caps are 10 Micron nominal.

The filler screen should be at least 30 mesh and should have an internal metal guard to prevent the fill spout from puncturing the screen. All Magnaloy's Screen are 30 mesh and we offer a Screen Guard Option.

Filter Selection and Life!

Filter life is difficult to determine. It is affected by many factors, including the operation systems condition, flow rate, viscosity of the fluid, duty cycle, environment, initial differential pressure, and cleanliness practices.

Loading is the process of plugging the pore of the media with contaminants. As the pores continue to plug, the pressure increases to maintain the fluid flow. This pressure is known as the differential pressure. At the beginning of the filter life cycle this pressure is relatively low, but pressure across the element increases as the pores in the media become plugged. The size, shape, and pore arrangement of a filter determines why some filter elements last longer than other types. Cellulose media (paper) will load more quickly than the same given area of fiberglass media (synthetic) due to the reduced number of pores per unit area.

Filter element selection is based on many factors, including operating environment, safety concerns from system failure, and criticality of system operation. Always consult your equipment manufacturer's recommendation for fluid cleanliness level.

magnaloy coupling company *501 Commerce Drive Alpena, MI 49707* ***989 356-2186***

A Division of Douville Johnston Corporation *Fax: 989 354-4190* *http://www.magnaloy.com*

For Channel Mounted Cushion Clamps

Unistrut Par No.	Hycon Part No.	Hydro-carft Part No.	Hydra-Zorb Part No.	Magnaloy Part No.
		- TUBE SIZES -		
004T008	H004T008	WS-04	100025	MCC-008T
006T010	H006T010	WS-06	100037	MCC-012T
008T012	H008T012	WS-08	100050	MCC-016T
010T014	H010T014	WS-10	100062	MCC-020T
012T016	H012T016	WS-12	100075	MCC-024T
014T018	H014T018	WS-14	100087	MCC-028T
016T020	H016T020	WS-16	100100	MCC-100T
018T022	H018T022	WS-18	100112	MCC-104T
			100119	MCC-106T
020T024	H020T024	WS-20	100125	MCC-108T
022T026	H022T026	WS-22	100137	MCC-112T
024N028	H024N028	WS-24	100150	MCC-116T
026N030	H026N030	WS-26	100162	MCC-120T
028N032	H028N032	WS-28	100175	MCC-124T
030N034	H030N034	WS-30	100187	MCC-128T
032N036	H032N036	WS-32	100200	MCC-200T
034N040	H034N040	WS-34	100212	MCC-204T
		WS-36	100225	MCC-208T
038N044	H038N044	WS-38	100237	MCC-212T
040N046	H040N046	WS-40	100251	MCC-216T
042N048	H042N048	WS-42	100262	MCC-220T
046N052	H046N052	WS-46	100287	MCC-224T
		WS-48	100300	MCC-300T
050N056	H050N056	WS-50	100312	MCC-304T
058N064	H058N064	WS-58	100362	MCC-320T
066N074	H066N074	WS-66	100412	MCC-404T
		- PIPE SIZES -		
009N012	H009N012	WS-04P	200025	MCC-008P
011N014	H011N014	WS-06P	200037	MCC-012P
014N018	H014N018	WS-08P	200050	MCC-016P
017N022	H017N022	WS-12P	200075	MCC-024P
021N026	H021N026	WS-16P	200100	MCC-100P
027N032	H027N032	WS-20P	200125	MCC-108P
030N034	H030N034	WS-24P	200150	MCC-116P
038N044	H038N044	WS-32P	200200	MCC-200P
046N052	H046N052	WS-40P	200250	MCC-216P
056N062	H056N062	WS-48P	200300	MCC-300P
064N072	H064N072	WS-56P	200350	MCC-316P
072N080	H072N080	WS-64P	200400	MCC-400P
089N096	H089N096	WS-80P	200500	MCC-500P
106N114	H106N114	WS-96P	200600	MCC-600P

To Cross Reference a Hydra-Zorb part number to the equivalent Magnaloy part number, follow the flow chart below and substitute the Magnaloy Code for the correponding Hydra-Zorb Code. This Cross-Reference is for the most common Hyra-Zorb clamps, for other Tier arrangements or Cushion Series, contact the factory for assistance and availability.

Hydra Zorb Part Number

XXX YYY 00 ZZZZ

Tier Arrangement Codes
Single Tier
0111
1111
3211
8111
6111
Multi Tier
1112
0600
4111
1771

Cushion ID Size Codes
025
031
037
050
054
062
067
075
084
087
100
105
112
125
131
137
150
162
166
175
190
200
212
225
237

Cushion Series Codes
511
521
522
524
531
532
541
542
561

Magnaloy Part Number

MMC- XXX YYYY - ZZZZ

Tier Arrangement Codes
Single Tier
0111
1111
3211
8111
6111
Multi Tier
1112
0600
4111
1771

Cushion ID Size Codes
008T
010T
012T
016T
008P
020T
012P
024T
016P
028T
100T
024P
100A
108T
100P
108A
116T
116A
108P
124T
116P
200T
200A
208T
200P

Cushion Series Codes
511
521
522
524
531
532
541
542
561

magnaloy coupling company *501 Commerce Drive Alpena, MI 49707* ***989 356-2186***
A Division of Douville Johnston Corporation *Fax: 989 354-4190* *http://www.magnaloy.com*

Differential Pressure ΔP Indicators

For use with Magnaloy SFH series Spin-On Filter Head

DP03 Series

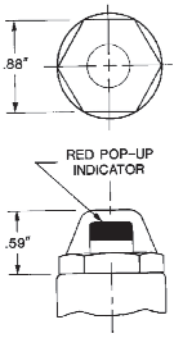

Low Pressure Visual Indicator
200 PSI max Operating Pressure
Temperature range up to 150^0 F
Automatic Resetting
Factory Installed, Available as kit for field replacement
For use with SFH Series Head Only

DP05 Series

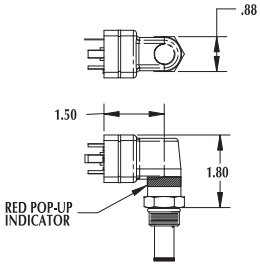

Cartridge Style Visual/Electrical Indicator
Hirschman (DIN 43650 Type AM Receptacle 11mm)
1NO, 1NC, & Common SPDT Switch (3 pole & ground)
5A; 125/250 VAC, 24 VDC (Resistive)
6000 psi max Operating Pressure
Temperatures up to 200F
Automatic Resetting
Factory Installed. Available as kit for field replacement.

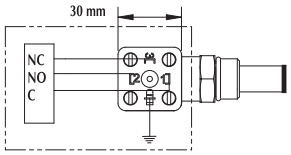

DP06 Series

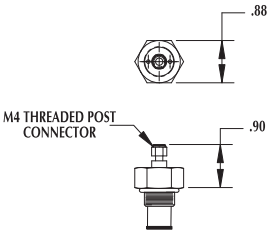

Cartridge Style Single Wire DC Indicator
200mA @ 36VDC
Momentary - Normally Open Circuit
6000 psi max Operating Pressure
Temperatures up to 200F
Automatic Resetting
Factory Installed. Available as kit for field replacement.
Ground Through Filter Head to Chassis. (In Oil)

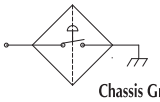

Chassis Ground

R

Filter Efficiency Standard

ISO 4572: 1981
ISO 16889: 1999

BETA Ratio Information

1. Beta Ratio means counting particles less than 40 Micron in size using a test dust as the test contaminant

2. Beta Ratio equals: $\frac{\text{Particle count* in oil up stream of filter}}{\text{Particle count* in oil down stream of filter}}$

   * The number of particles of a given size or greater per unit volume

3. Example: $\frac{\text{2,000 Particles 10um or greater in oil sample before filter}}{\text{500 Particles 10 um or greater in oil sample after filter}} = 4.0$

   -OR-

   $\frac{2{,}000}{500} = 4.0$ (Filter removed 75% of particles 10 um OR GREATER)

4. Terminology: $B_{10} = 4.0$ (Beta 10 Ratio equals 4.0)

5. Ratio Numbers and Equivalent Efficiencies:

   $Beta_x$ = 2.0 Represents 50% Efficiency (Nominal Rating)
   $Beta_x$ = 20.0 Represents 95% Efficiency
   $Beta_x$ = 75.0 Represents 98.67% Efficiency (Absolute Rating)
   $Beta_x$ = 200.0 Represents 99.5% Efficiency

Note: *Any Beta greater than 100 adds less than 1% to overall efficiency, and greatly increases pressure drop through the filter.*

Typical Stainless Steel Wire Cloth Media

Mesh Size	Degrees of Filtration
30	560 Micron
60	280 Micron
100	141 Micron
200	75 Micron
200 x 600	20 Micron
200 x 1400	10 Micron
325 x 1900	3 Micron

magnaloy coupling company *501 Commerce Drive Alpena, MI 49707* ***989 356-2186***
A Division of Douville Johnston Corporation *Fax: 989 354-4190* *http://www.magnaloy.com*

Filter Selection Data

Fluid Viscosity & Flow Capacity

The single most critical variable in determining the flow capacity of a filter is the viscosity of the fluid passing through it. Pressure drop (ΔP) produced by flow through a filter assembly is directly proportional to the viscosity of the fluid being filtered. At any given flow rate, a lower viscosity fluid will produce less pressure drop (and greater flow capacity) than that of a higher viscosity fluid.

Fluid Viscosity & Temperature

A fluids viscosity is governed by its temperature. As a fluid's temperature increases, its viscosity decreases. Use a temperature versus viscosity chart to determine the viscosity of the fluid used in your system at its normal operating temperature.

Estimating Pressure Drop (ΔP)

All pressure drop data found in this catalog is based on 150 SUS oil. If the fluid to be filtered in your application has a viscosity of 150 SUS at the system's normal operating temperature, pressure drop values can be taken directly off the graphs. If the fluid's viscosity is not 150 SUS, use the formula below to estimate the pressure drop.

$$\text{Estimated Pressure Drop } (\Delta P) \text{ through filter assembly} = \text{Pressure Drop Value taken from graph} \times \frac{\text{Viscosity of Fluid at System Operating Temperature}}{150}$$

Filtration Application Guidelines

Suction Strainers:

Maximum pressure drop : 1" Hg
Maximum line velocity: 5 feet per second

Suction Line Filters:

Maximum pressure drop: No more than 50% of the Maximum allowable vacuum recommended by the pump manufacturer (at normal operating temperature with a clean filter element).
Maximum line velocity: 5 feet per second

Return Line Filters:

Maximum pressure drop: No more than 50% of the filter by-pass valve setting at normal operating temperature with a clean filter element.
Maximum line velocity: 15 feet per second
A By-Pass Valve should ALWAYS be included on a Return Filter

Pressure Filters:

Maximum pressure drop: No more than 50% of the filter by-pass valve setting at normal operating temperature with a clean filter element.
Maximum line velocity: 25 feet per second

magnaloy coupling company 501 Commerce Drive Alpena, MI 49707 989 356-2186
A Division of Douville Johnston Corporation Fax: 989 354-4190 http://www.magnaloy.com

NOTES

R

Make the Connection with magnaloy.....

Whatever your Fluid Power Unit needs, magnaloy has the products to keep you connected.

Flexible Drive Couplings

Top-of-the-line magnesium couplings are lighter, yet stronger than either cast iron or aluminum. They also offer better corrosion resistance and easier handling.

Pump/Motor Mounts

Precision machined aluminum & custom steel pump/motor mounts directly connect the motor and pump while ensuring accurate shaft alignment and enclosing the coupling. Vertical and horizontal models readily available from stock.

PM 90 Couplings

Economical PM-90 Iron Powder Couplings have long lasting nitrile, hytrel or urethane inserts. Double set screws give excellent gripping power.

Magnaloy Hydraulic Bar Manifolds & Accessories

Complete line of inline Bar Manifolds, Subplates, Cover Plates, Valve Adaptors, Integrated Circuit Manifolds, and Accessories to make the design and fabrication of Hydraulic Circuitry simple and easy. Wide range of sizes include: D03, D05, D05H & D08 in aluminum and steel with ports available in SAE, NPTF, BSPP, and BSPT styles. Custom design and fabrication also available, consult factory.

Rod End Couplers

Two models of accurately machined high tensile cylinder rod end alignment couplers offer 7° or 10° spherical and 1/8" parallel misalignment capabilities.

Magnaloy Reservoirs & Reservoir Accessories

Magnaloy offers a complete line of standard reservoirs and reservoir accessories. In addition, we offer custom reservoir fabrication to meet our customer specific needs. Reservoirs accessories such as Clean Out Covers and SAE Couplings are available for the "do-it-yourself" reservoir manufacturer

For a Free Catalog of any of these fine products call or visit us on-line.

Accessories

Filler Breather Adaptors, Filler Breathers, Reservoir Flanges, Suction Strainers, Gauge Isolators, Liquid Level Gauges, Modular O-Ring Kits.

Magnaloy Pressure Switch

Pressure Sensing switch capable of sensing up to three (3) separate pressures. Each sensor is externally independently adjustable from 200 to 4000 psi. Viton seals provide wide fluid compatibility range.

magnaloy coupling company *501 Commerce Drive Alpena, MI 49707* ***989 356-2186***

A Division of Douville Johnston Corporation *Fax: 989 354-4190* *http://www.magnaloy.com*