D03 (Old D01) Subplate

Dual Ported

no relief

Part Number SFP10103

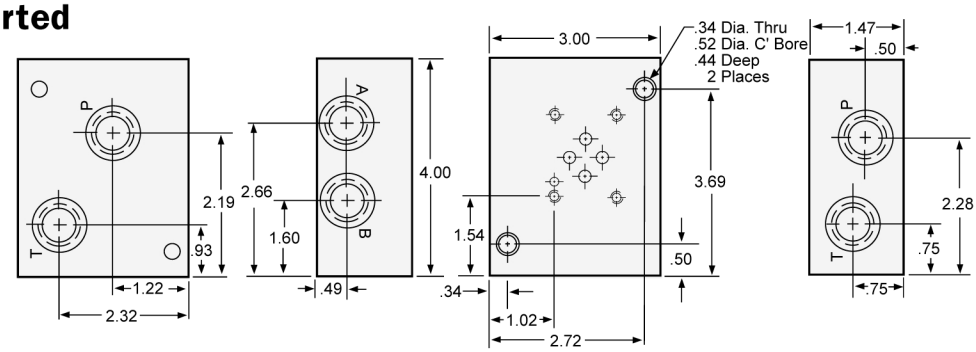

Dual Ported

with relief valve cavity

Part Number SFP10104

Port Size: 9/16-16 O-ring ports (6) (SAE -6)

Pressure Rating: 5000 psi

Material: 6061-T6 Aluminum

Two (2) 5/16-18 X 1 1/2 long socket head cap screws are furnished with each subplate (90013)

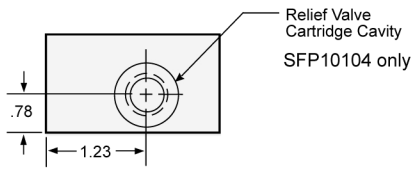

The Relief Valve Cavity is machined to dimensions furnished by the following manufacturers:

Compact Controls	109
Delta	E Series
Fluid Controls	SC-316
Fluid Power Systems	10-2
HydraForce	VC-10-2
Modular Controls	C-10-2
Parker	C-10-2

D03 (Old D01) Cover Plates

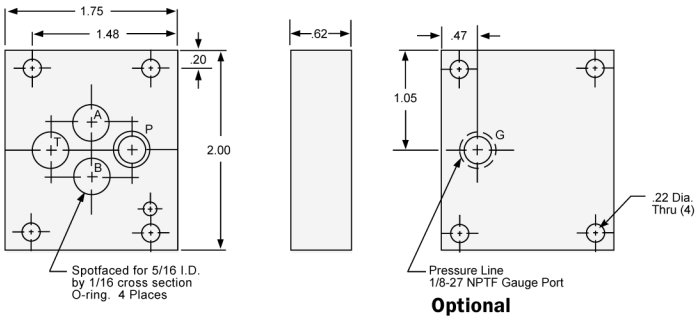

Parallel

Part Number SFP10089 **without gauge port**

Part Number SFP10090 **with gauge port**

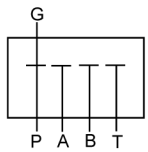

Pressure Rating: 5000 psi

Material: 6061-T6 Aluminum

Items Furnished with Cover Plate

- Four (4) #10-24 X 7/8 long socket head cap screws (90008)
- Four (4) Viton O-rings (90000) AS 568A-011
- One (1) Roll Pin (90006)

Series

Part Number SFP10091

Pressure Rating: 5000 psi

Material: 6061-T6 Aluminum

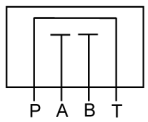

Cross Over

Part Number SFP10092

Pressure Rating: 5000 psi

Material: 6061-T6 Aluminum

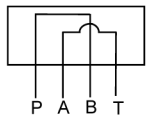

D03 (Old D01) Tapping Plate

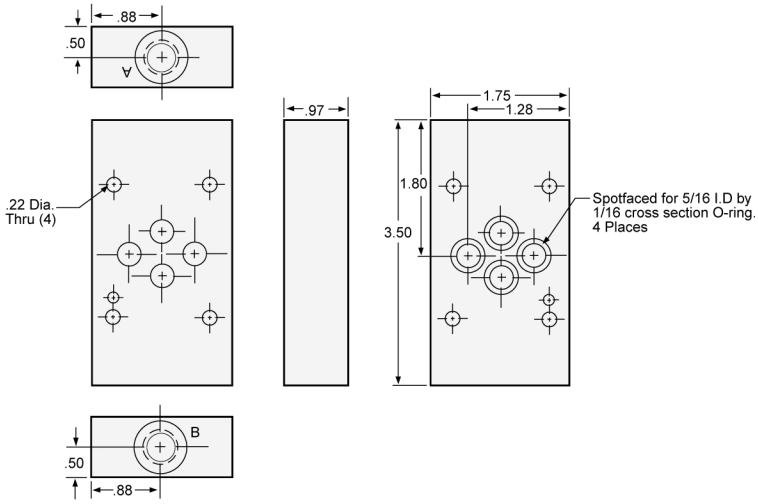

Part Number SFP10134

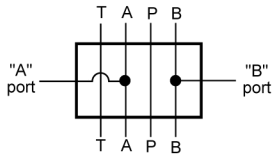

Part Number SFP10135

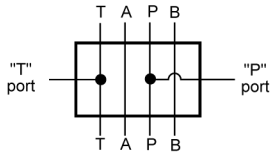

A & B Ports

Port Size

- 9/16-18 O-ring ports (2) (SAE -6)

Pressure Rating

- 5000 psi

Material

- 6061-T6 Aluminum

Items Furnished with Tapping Plate

- Four (4) Viton O-rings (90000) AS 568A-011
- One (1) Roll Pin (90006)